TOYOTA at HOME

"TOYOTA" Sewing & Knitting Machines by AISIN, a Member of The TOYOTA Group.

# INSTRUCTION BOOK

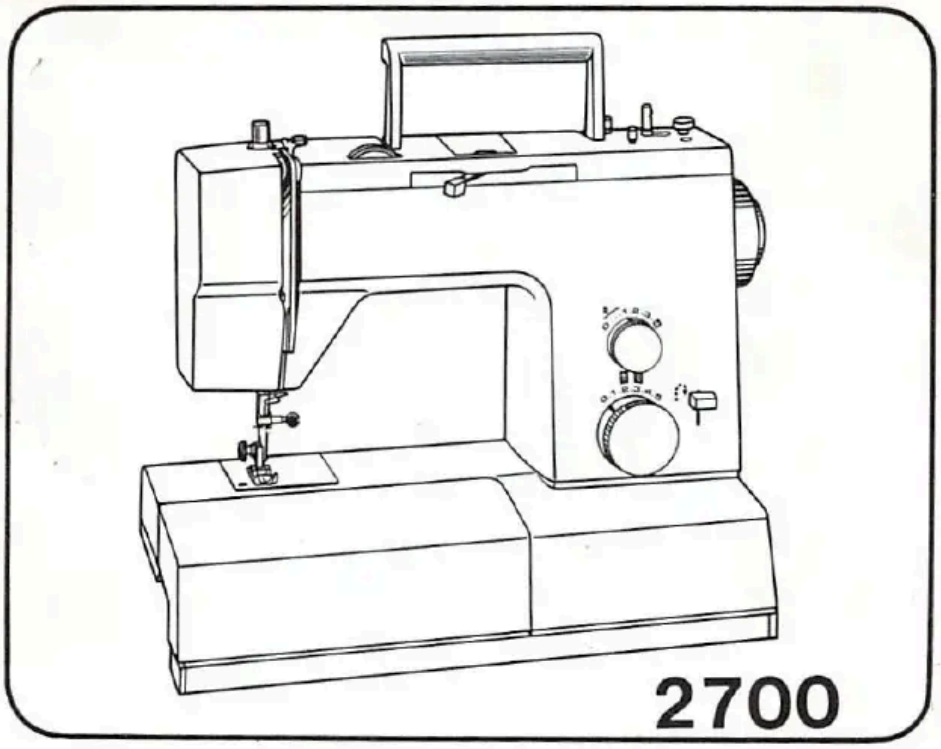


A STITCH AHEAD OF THE TIMES

TOYOTA

sewing machines

## IMPORTANT

"When leaving the sewing machine unattended, the mains switch of the machine must be switched off or the plug must be removed from the socket outlet. When servicing the sewing machine or when removing covers or changing lamps, the machine must be disconnected from the supply by removing the plug from the socket outlet."

THIS APPLIANCE (U.K. SPECIFICATIONS) COMPLIES WITH BS 800 STANDARD

Lamp Maximum: 15 Watt

# CONTENTS


1. NAMES OF PARTS ..... 1
2. ACCESSORIES ..... 3
3. BEFORE SEWING ..... 4
   - Detaching Extension Table ..... 4
   - Connecting Foot Controller and Power Cord ..... 5
   - Changing Foot ..... 6
   - Changing Needle ..... 7
   - Bobbin Winding ..... 8
   - Inserting Bobbin ..... 11
   - Adjusting Lower Tension ..... 12
   - Drop Feed Lever ..... 12
   - Threading Upper Thread ..... 13
   - Twin Needle Threading ..... 14
   - Drawing Up Lower Thread ..... 15
   - Fabric, Thread and Needle Chart ..... 16
   - Replacing Drop-in Cams ..... 17
4. STRAIGHT SEWING ..... 19
   - Stitch Length Dial ..... 19
   - Double Presser Foot Lifter ..... 20
   - Adjusting Thread Tension ..... 21
5. ZIGZAG SEWING ..... 22
   - Zigzag Width Control ..... 22
   - Thread Tension for Zigzag Stitch ..... 22
6. MAKING BUTTONHOLES ..... 23
   - Determine Length ..... 23
   - Determine Width ..... 23
   - Left and Right Side Balance of Buttonhole ..... 25
   - Cutting Buttonholes ..... 26
   - Corded Buttonholes ..... 26
7. SEWING ON BUTTONS ..... 27
8. OVERCASTING ..... 28
9. OVERLOCKING ..... 29
10. BLIND HEM STITCH ..... 30
    - Elastic Blind Hem Stitch ..... 31
11. STRETCH SEAMS ..... 32
12. SHELL STITCHING ..... 33
13. PIN TUCKING ..... 34
14. QUILTING ..... 35
15. LAPPED SEAM SEWING ..... 36
16. MENDING ..... 37
    - Patching ..... 37
    - Mending a Rip ..... 37
17. APPLIQUE WORK ..... 38
18. EMBROIDERY ..... 39
19. DECORATIVE TOUCHES ..... 40
    - Automatic Embroidery ..... 40
20. MAINTENANCE ..... 42
    - Cleaning ..... 42
    - Oiling ..... 43
21. TROUBLE CHART ..... 44
    - Changing Light Bulb ..... 45
22. STITCH VARIETIES ..... 46

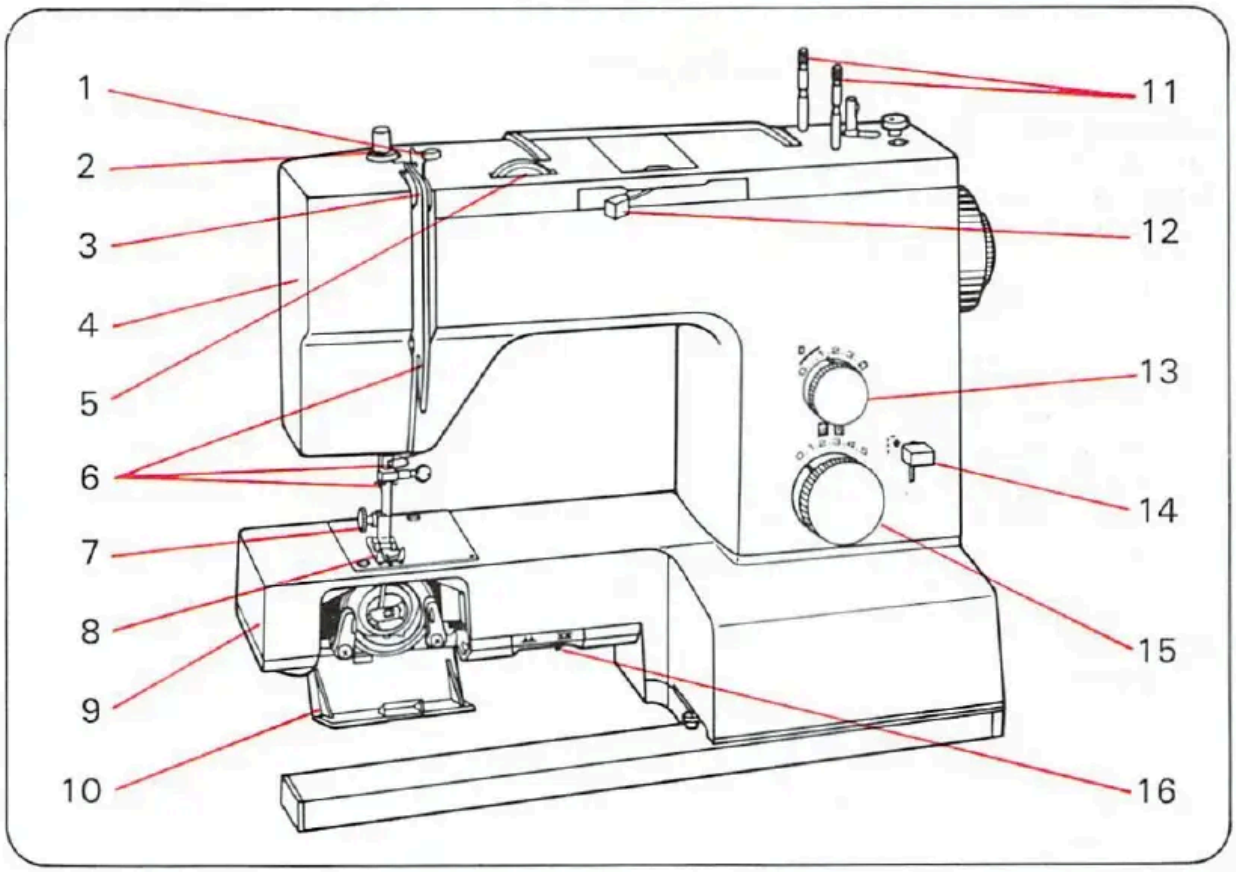
1
2
3
4
5
6
7
8
9
10
11
12
13
14
15
16

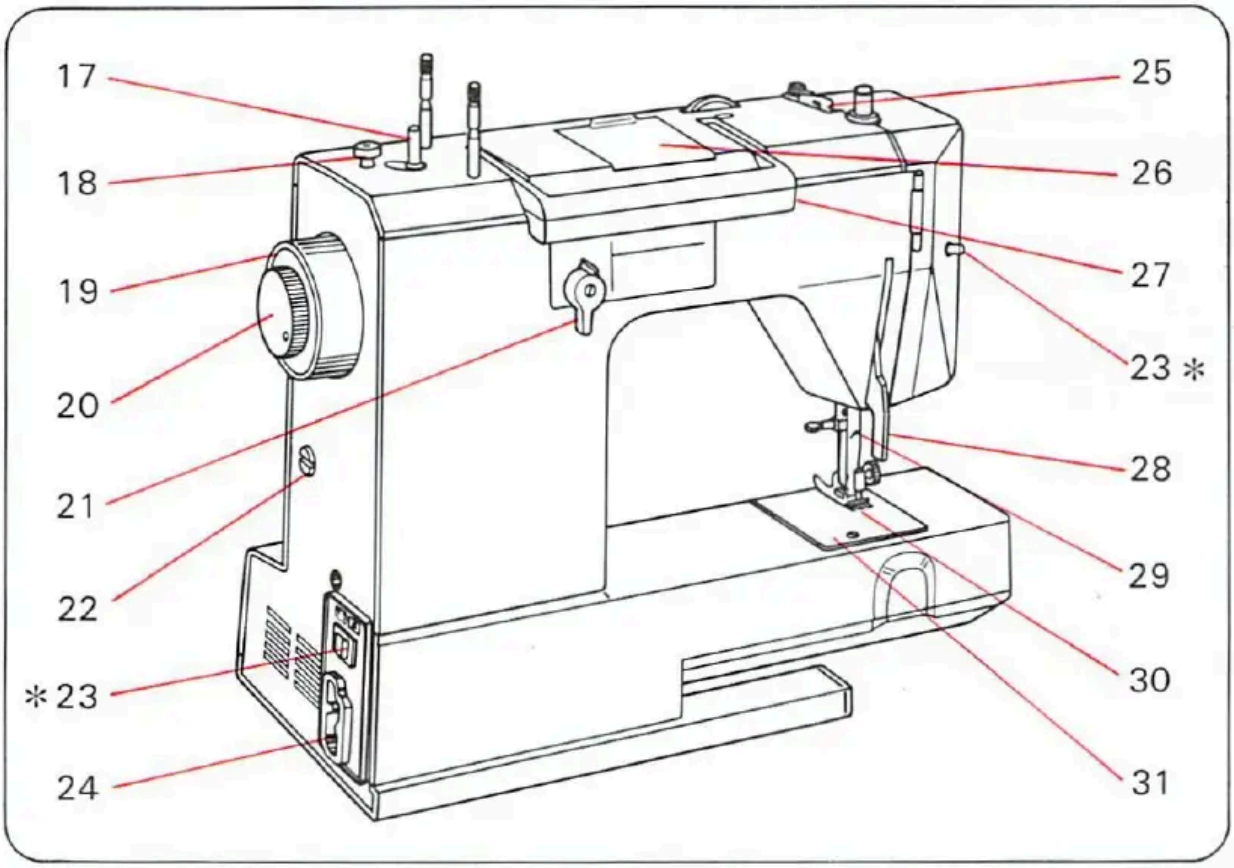
17
18
19
20
21
22
*23
24
25
26
27
23 *
28
29
30
31

## 1. NAMES OF PARTS

1. Thread guide for bobbin winding
2. Pressure regulator
3. Take-up lever
4. Face cover
5. Upper thread tension dial
6. Thread guide for upper threading
7. Presser foot thumb screw
8. Presser foot
9. Free arm
10. Shuttle cover
11. Spool pins
12. Pattern selection lever
13. Stitch length dial
14. Reverse sewing lever
15. Zigzag width control
16. Drop feed lever

17. Bobbin winding spindle
18. Bobbin winding stopper
19. Handwheel
20. Stop motion knob
21. Reverse (super automatic) stitch control knob.
22. Special buttonhole adjustment
23. Switch *
24. Socket
25. Thread guide for upper threading
26. Cam insert cover
27. Handle
28. Presser foot lifter
29. Thread cutter
30. Feed dog
31. Needle plate

    * Specifications vary from country to country.

## 2. ACCESSORIES

| | |
|---|---|
| Felts (2 pcs.) | Bobbins (3 pcs.) |
| Buttonhole foot | Needles<br>Ordinary needles (3 pcs.)<br>Ball point needle (1 pc.)<br>Twin needle (1 pc.) |
| Button sewing foot | |
| Zipper foot | Screw drivers<br>(small)<br>(large) |
| Roll hemming foot | Oiler |
| Quilting guide | |
| Cloth guide | |
| Buttonhole cutter | Accessories are stored in extension table. |

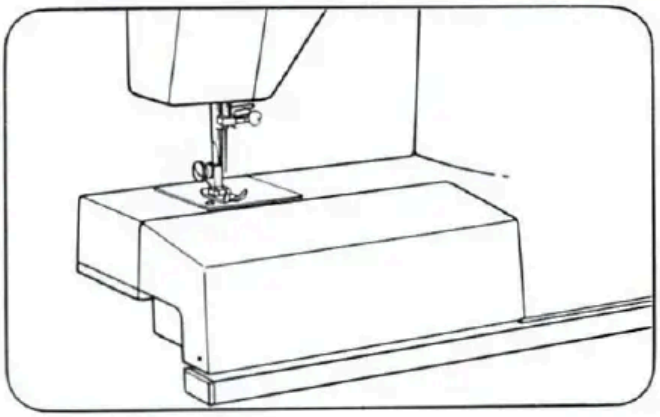

## 3. BEFORE SEWING

Machine is stored in flat-bed style which makes your work easier in ordinary sewing.

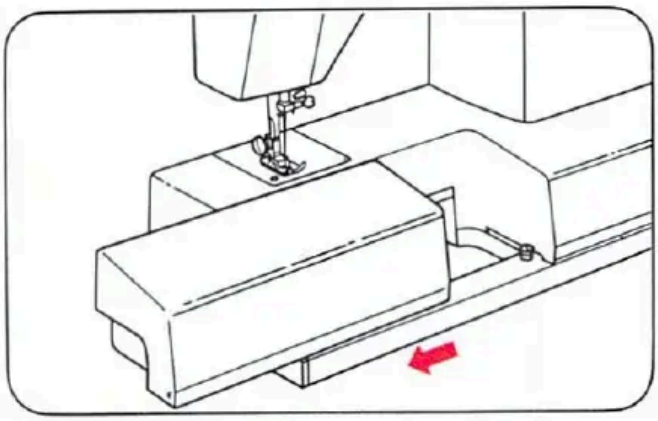

### Detachable Extension Table

Slide table off and the machine is used as a free-arm model.

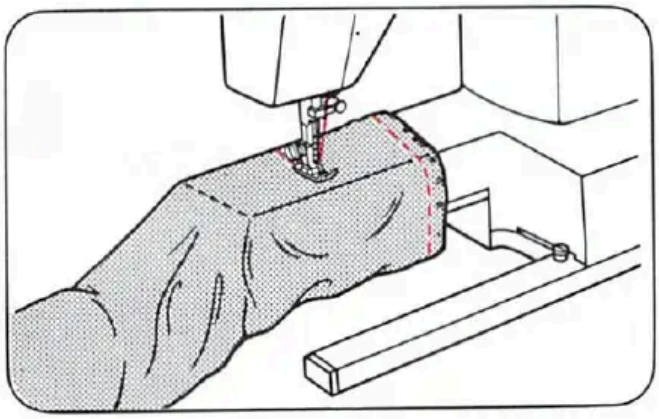

Free-arm is convenient to sew or embroider; trousers, sleeves, cuffs of T-shirts, blouses, etc.

Do vice-versa of above steps to attach extension table.

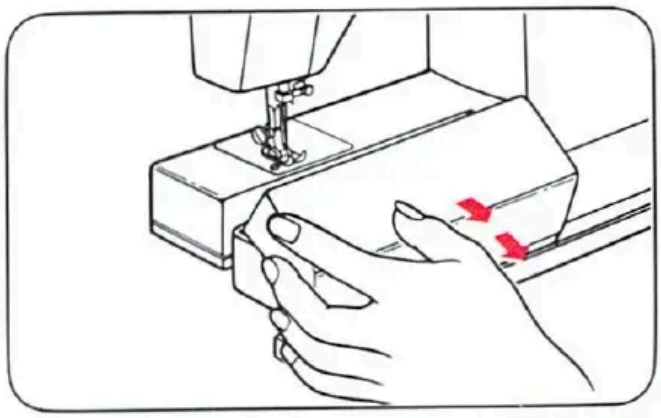

To open lid of accessory box, push it open, as illustrated.

## Connecting foot controller and power cord

Connect foot controller and power cord ① ②.

Before plugging in your machine, be sure that voltage is same as that of your machine. (written on a plate at back of machine)

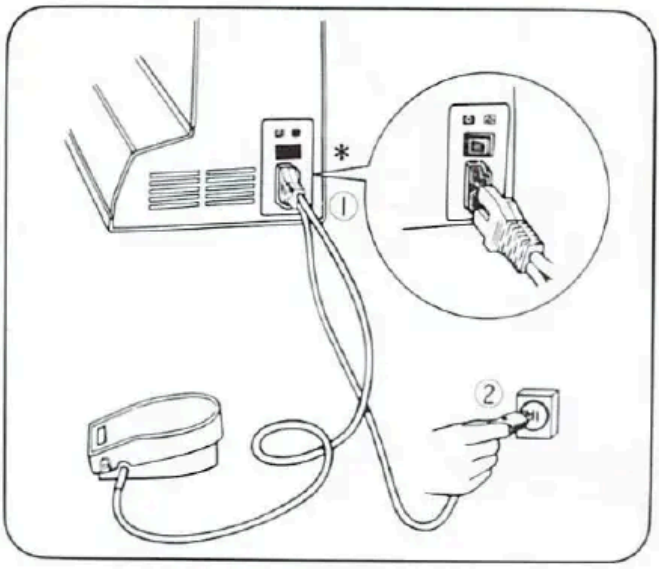


Switch on, put power on the machine and turn on the sewing light.

Push button to turn sewing light on and off.

Always switch off or unplug machine when not in use.

*Specifications vary from country to country.

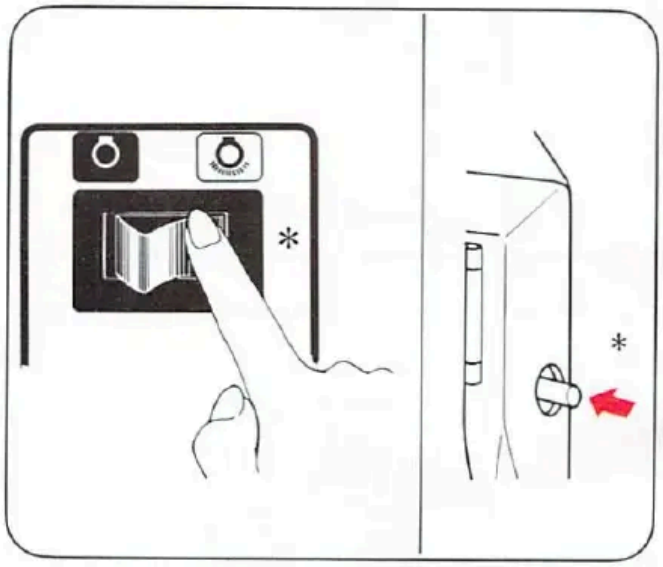


The more you press foot controller, the faster the machine runs.

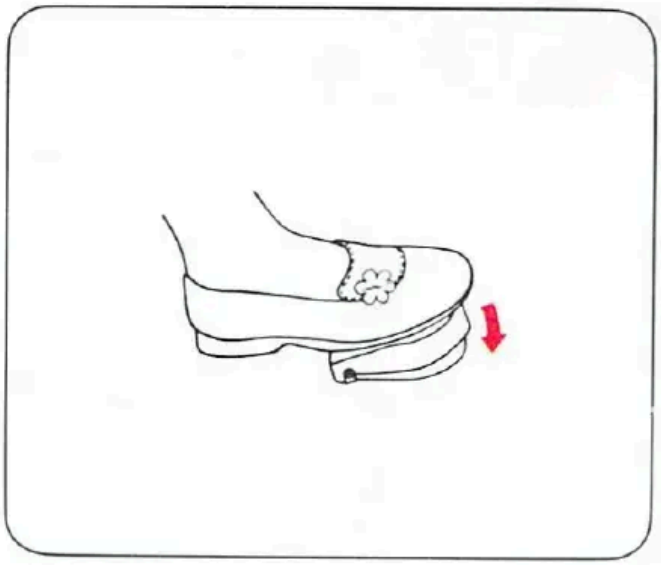

## Changing Foot

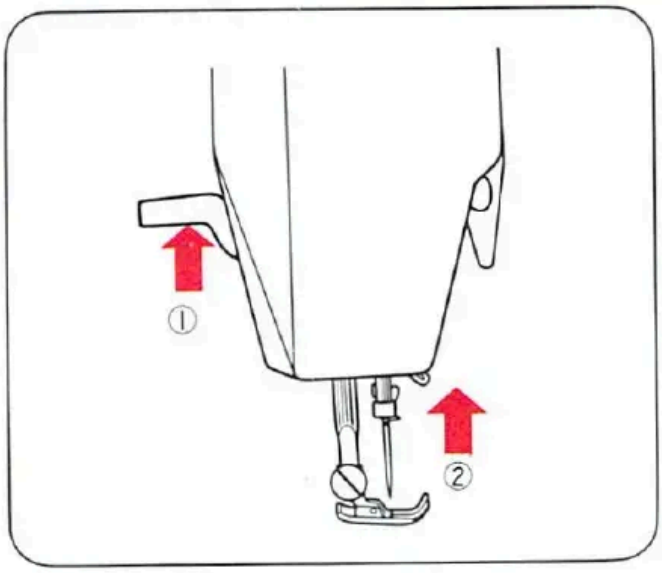


Raise presser foot lifter ①.

Set needle in the highest position by turning handwheel towards you ②.

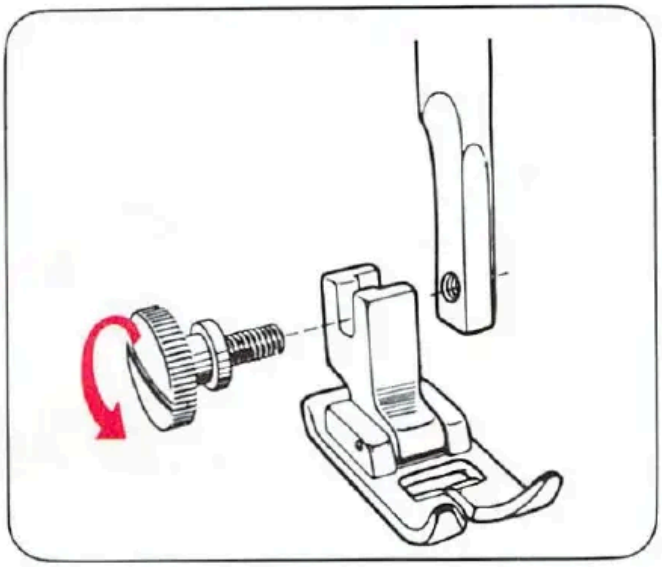

Remove foot holder by loosening screw with screwdriver.

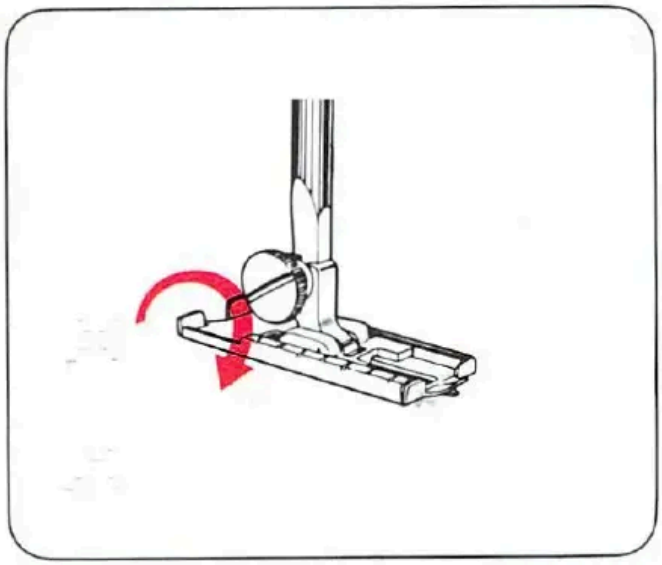

Replace screw-snap type presser foot and tighten screw.

## Changing Needle

Set needle in the highest position by turning handwheel towards you.

Loosen needle clamp screw and remove needle.

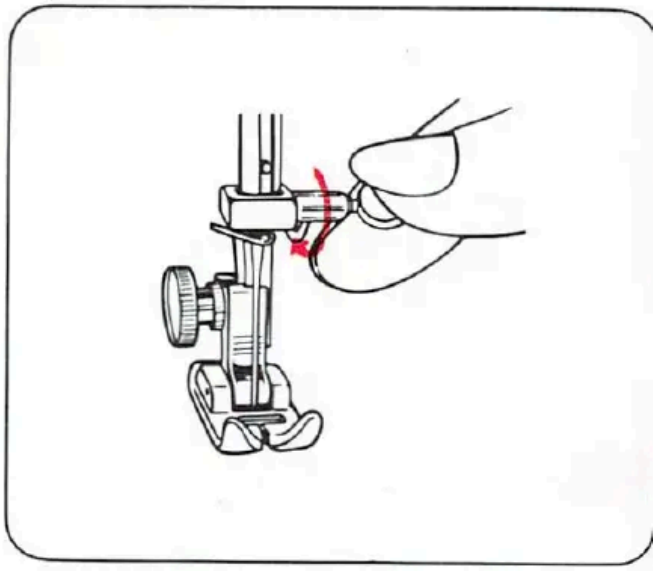

With flat face away from you, insert a new needle into groove of needle bar.

Push needle until it reaches stopper ⓐ and tighten needle clamp screw firmly.

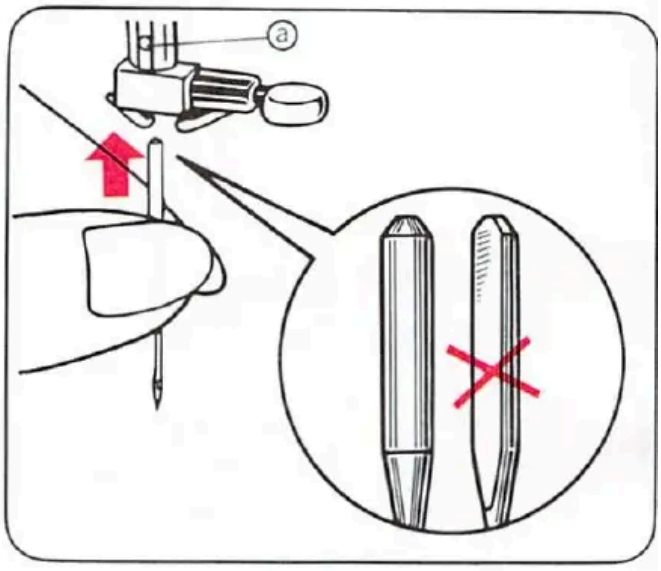


Always use a straight needle with a sharp point.

Using defective or worn needles not only causes stitch skipping, breakage of needles or snapping of thread; it also can damage hook and needle plate.

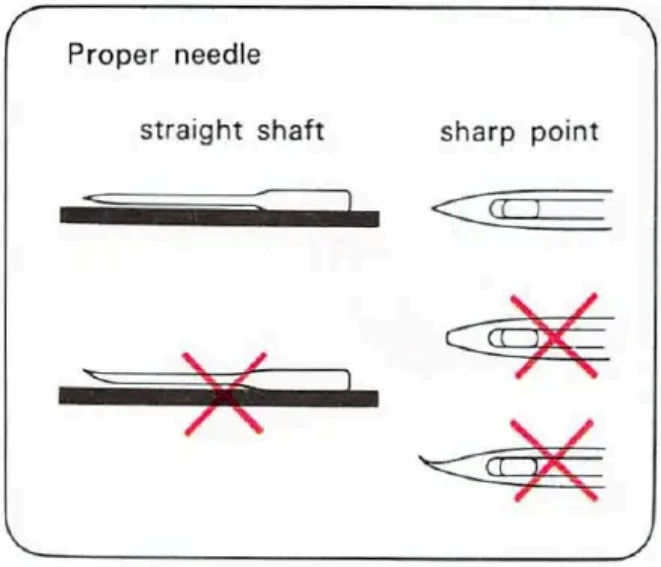

## Bobbin Winding

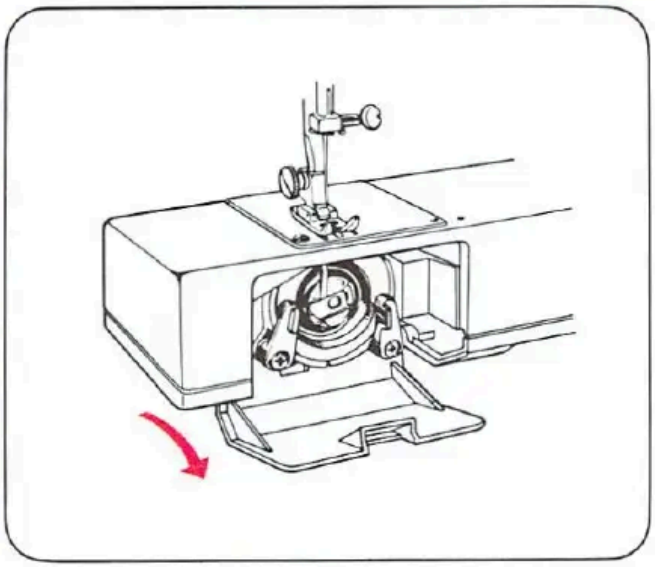

Set needle in the highest position by turning handwheel towards you.

Open shuttle cover.

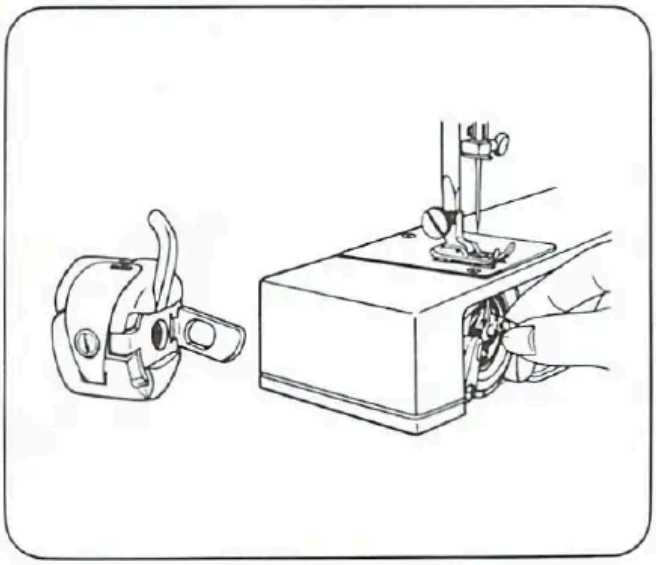

Open latch of bobbin case and take it out.

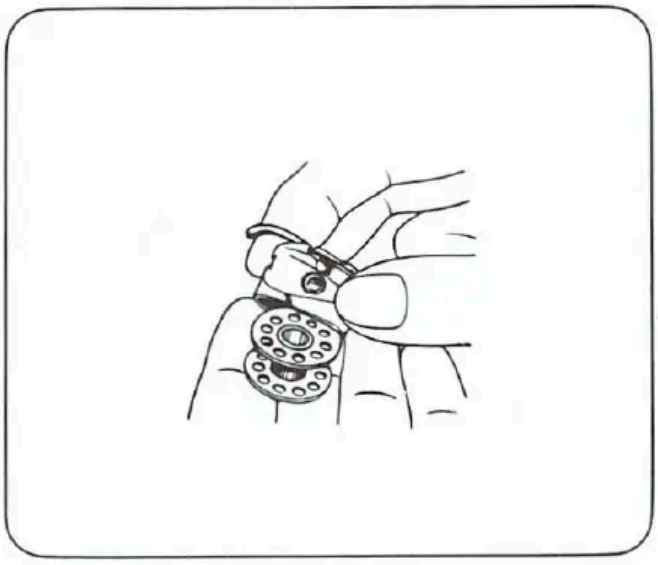

Close latch of bobbin case and bobbin comes out easily.

Push back to fold handle.
Pull out spool pin and put a felt on spool pin.

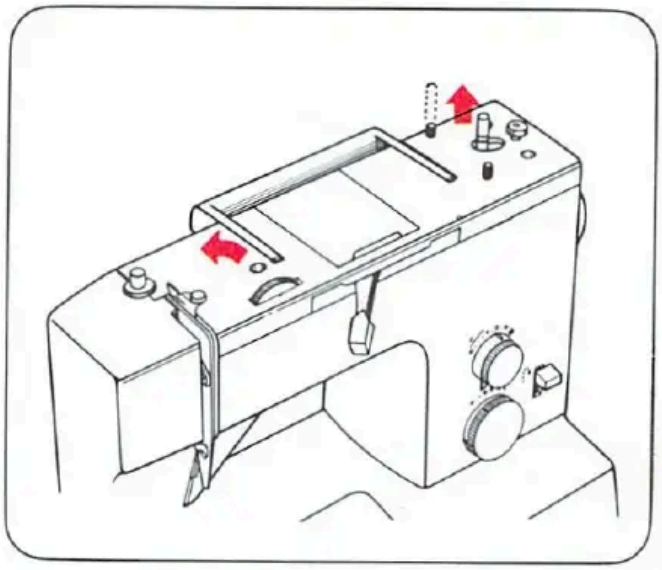

Put a spool on spool pin.
Draw thread from spool pin through thread guide and pre-tension device, following numbers ① and ②.

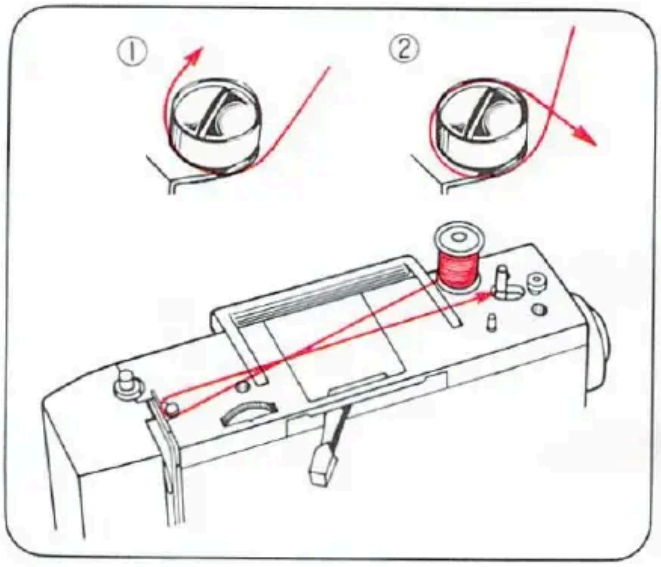


Wind thread clockwise around bobbin several times.
Push bobbin on to spindle.

Holding handwheel with your left hand disengage handwheel by unscrewing stop motion knob.

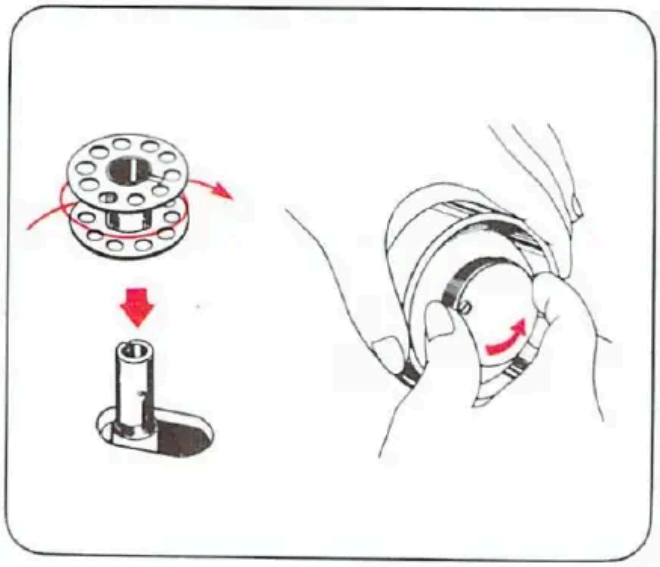

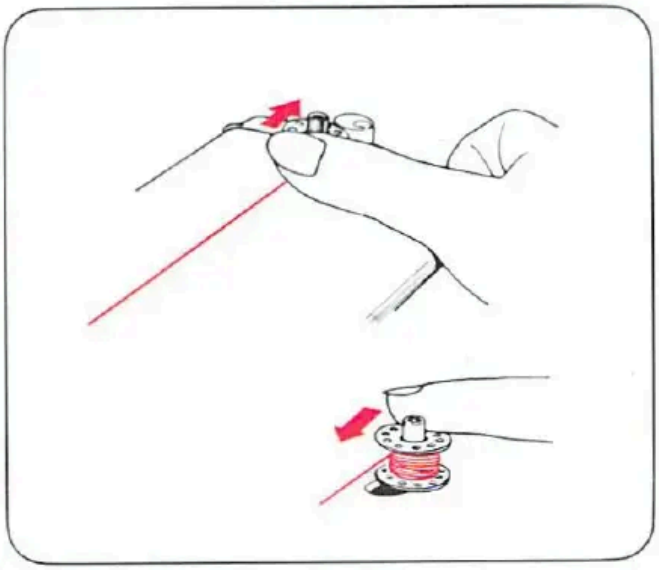

Push bobbin to right and press down foot controller.

Machine stops automatically when bobbin is full.

Push bobbin to left, to disengage from wheel.

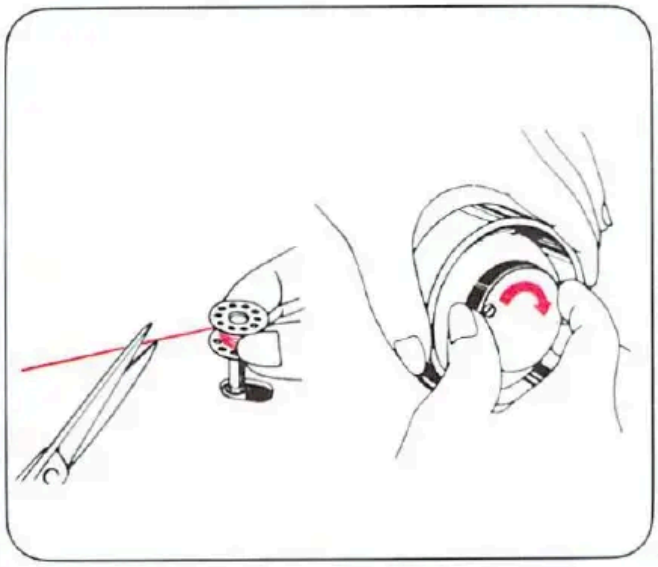

Take off bobbin from spindle and cut thread.

Retighten stop motion knob.

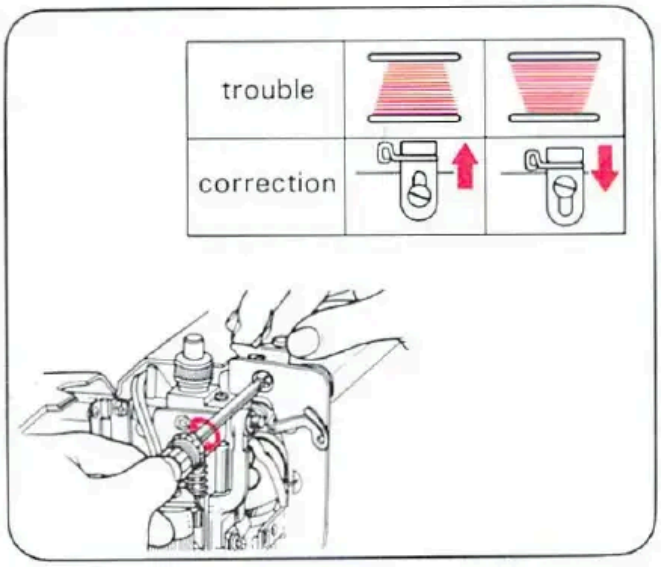


If bobbin is wound unevenly as shown, open face cover and loosen set-screw of the guide for bobbin winding: Use screw driver to adjust height.

## Inserting Bobbin

Place bobbin in its case with thread running in direction of arrow.

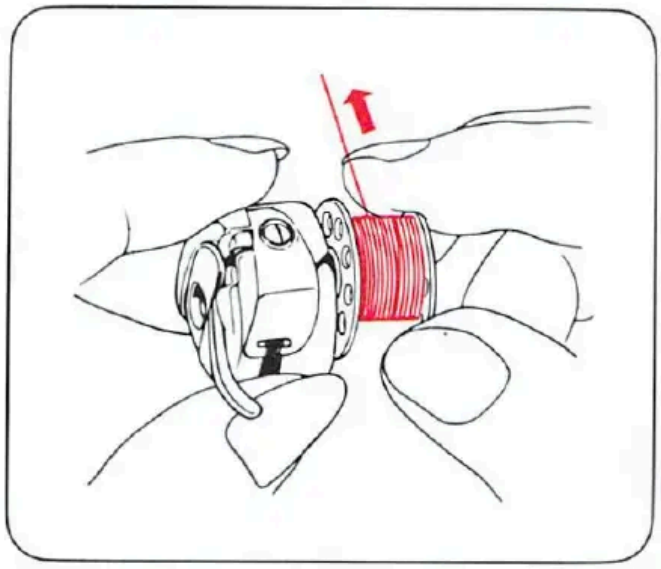

Guide thread into slot ⓐ of bobbin case.

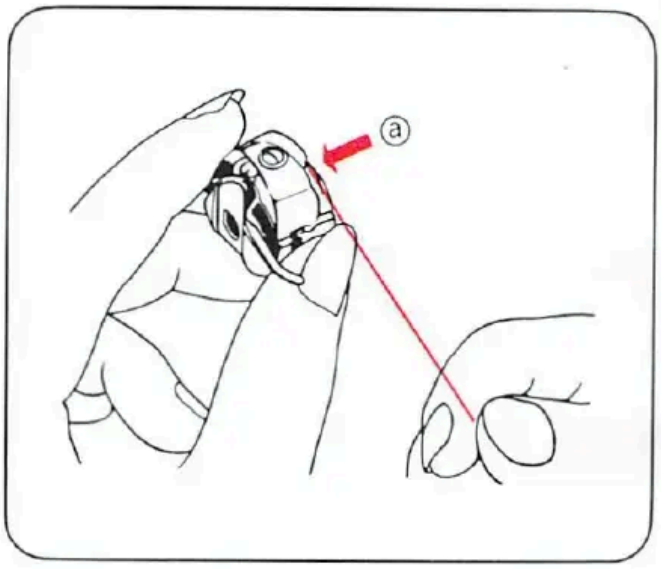


Pulling thread to left, bring it under tension spring then to delivery eye ⓑ.

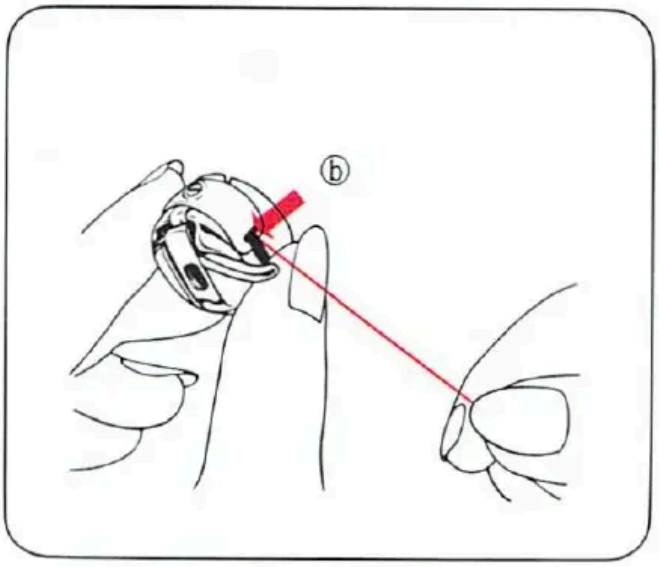

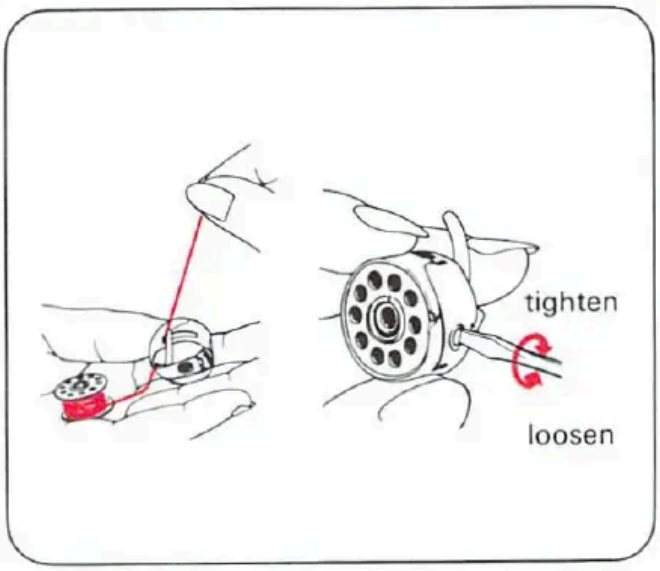


## Adjusting Lower Tension

To test bobbin tension, hang and shake bobbin case as shown.

At proper tension bobbin case will gradually drop a small amount.

To adjust tension, turn adjusting screw with small screwdriver.

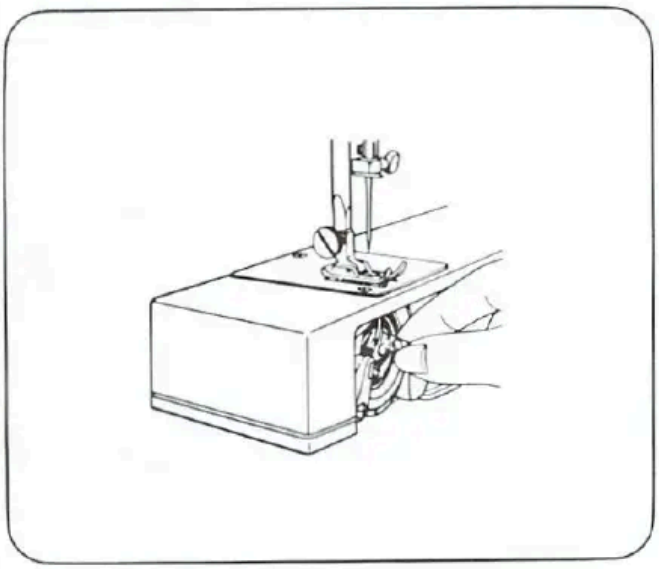

Raise needle in the highest position.

Leave end of thread of about 10 cm (4") from bobbin case.
Take hold of latch and push bobbin case into shuttle
Release latch when bobbin case is fully inserted.

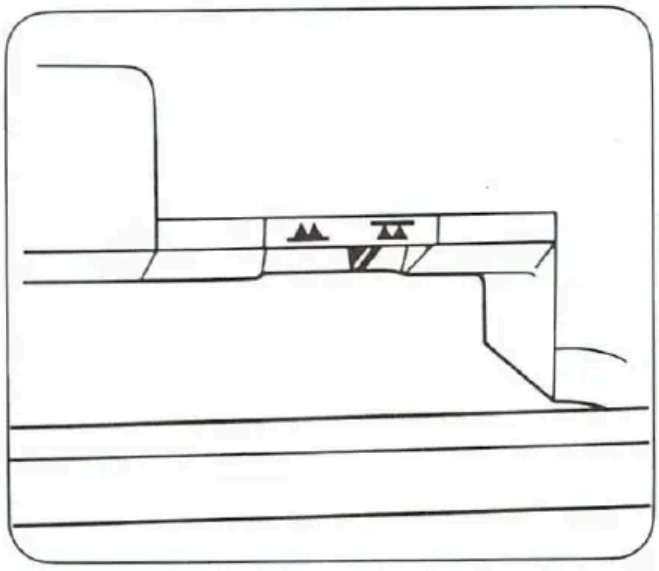

## DROP FEED LEVER

The lever is in the right side of shuttle cover. For normal sewing, move the lever to ▲▲ position.
To lower feed dog, move the lever to ▲▲ position.
This position is used for button sewing, darning and embroidery.

## Threading Upper Thread

Raise presser foot lifter.
Raise take-up lever to the highest position by turning handwheel towards you.

Thread following numbers ①-⑦.

Pass thread through guide ①.

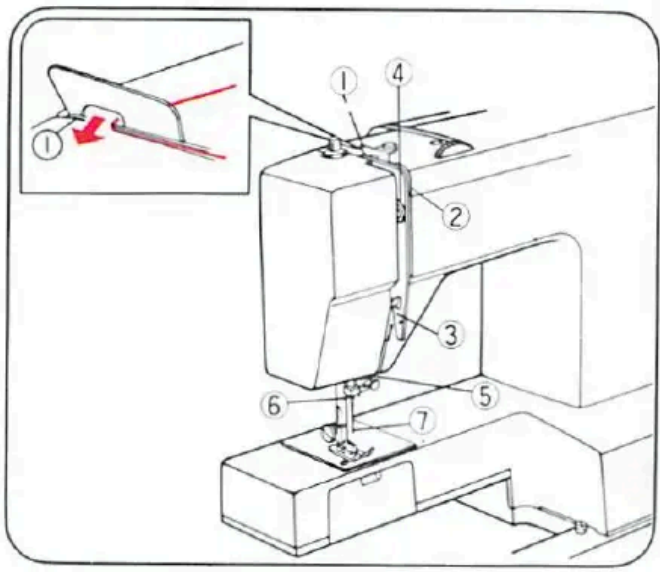


Lead thread either side of tension disc ②.

Hook the thread under the guide ③ as shown.

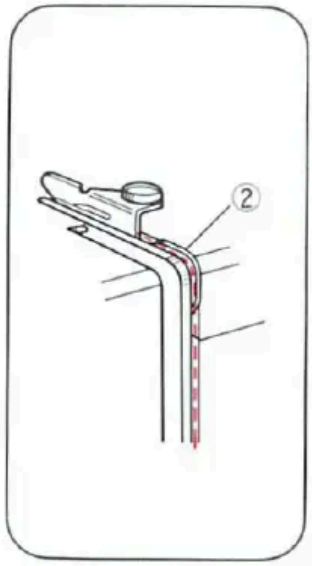


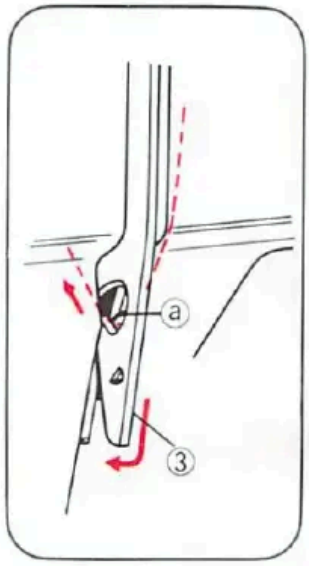


Thread take-up lever ④.

Pass thread to guide ⑤ from right to left, and guide ⑥ (left one) then needle eye ⑦.

Leave end of thread of about 15 cm (6").

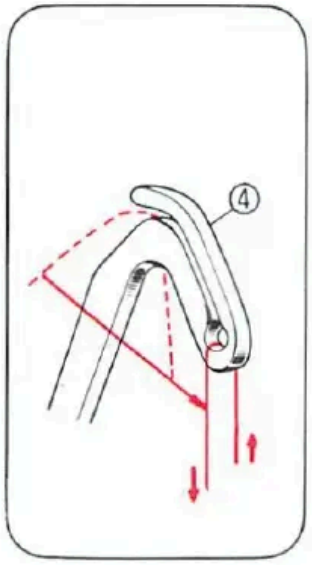


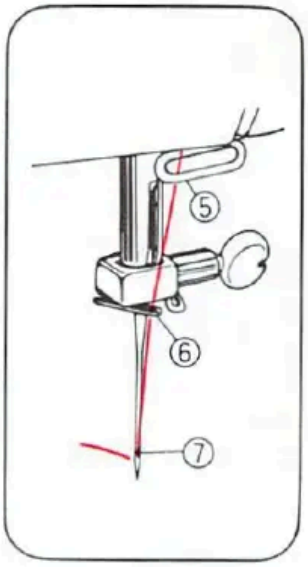

## Twin Needle Threading

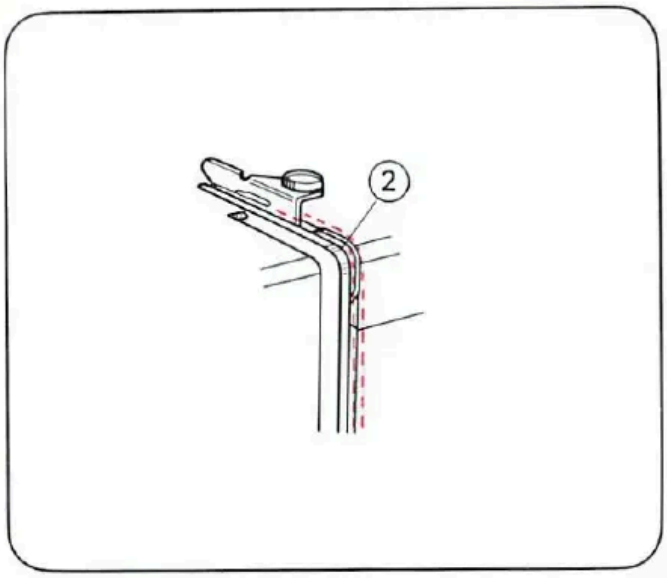


Thread in the same way as normal threading, except at points ②, ⑥ and ⑦.

At point ②, pass threads separatly to right and left of tension disc.

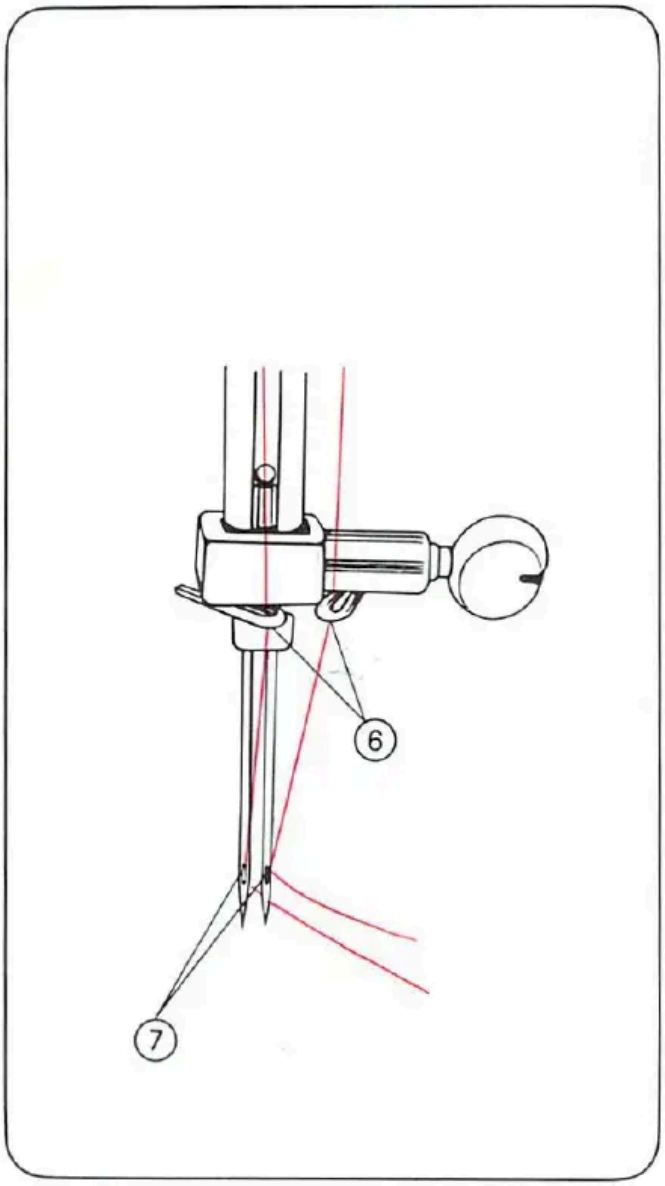


At guide ⑥, pass one of threads to right guide and the other at left guide.

At point ⑦, thread from right guide should be lead to right needle eye, and from left guide to left needle eye.

Leave ends of threads of about 15 cm (6").

* When using zigzag width control, set it between 0 and 2.5. To set control above 2.5 will cause needle to break.

## Drawing Up Lower Thread

Hold end of upper thread with left hand.

Turn handwheel slowly towards you until needle moves down and up again.

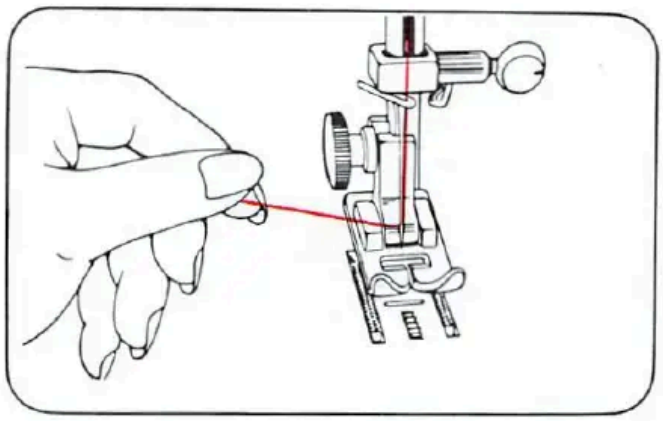

Pull upper thread slowly and lower thread will be brought up in a loop.

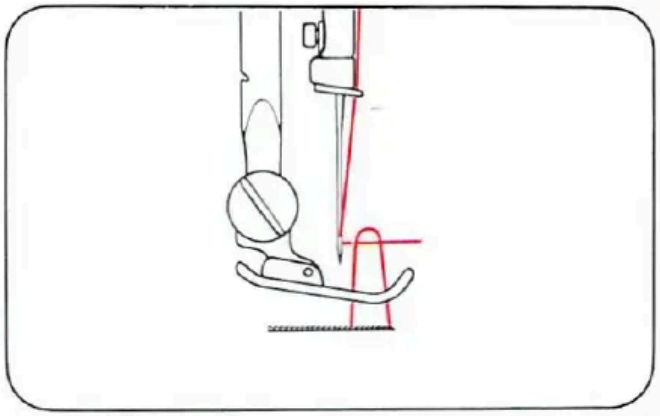

Pull out both threads to about 15 cm (6") and place them together under presser foot on left.

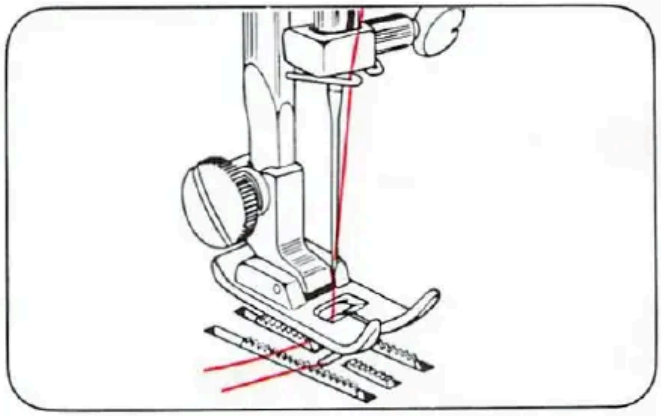

## Foot Pressure

Push down the outer ring of the pressure regulator. This will release the pressure on the presser foot. To increase the pressure, push down inner pin until suitable pressure is obtained.
Insufficient pressure may cause poor feeding of the fabric, skipped stitches, or difficulty in guiding the fabric. If feed dogs or presser foot marks appear on the fabric, reduce the pressure.
When sewing multiple thickness or heavy fabric, reduce the pressure. Increase pressure when sewing lighter weight fabrics.

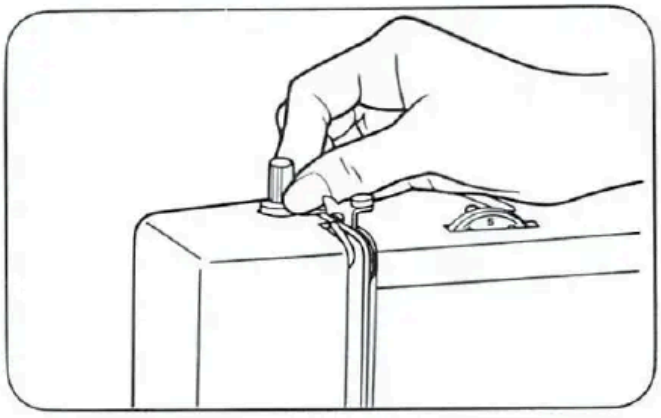

## Fabric, Thread and Needle Table

| FABRIC | THREAD | | | NEEDLE | | | REMARKS |
|---|---|---|---|---|---|---|---|
| | European Cotton | Mercerized Cotton | Cotton Covered Polyester, Silk, Nylon | European 705 | U.S.Size 15x1 | Point Style | |
| VERY SHEER; Lace, Voile, Chiffon, Net | 70 | 60 | Silk Nylon | 65–70 | 9 | Regular | Loosen upper tension one or two points |
| SHEER; Blouse Crepe, Lawn, Organdy, Taffeta | 50–70 | 60 | Silk Nylon | 65–70 | 9 | 〃 | |
| LIGHT-WEIGHT; Crepe, Wool, Brocade, Velvet | 30 | 50 | Silk | 75–80 | 11 | 〃 | |
| MEDIUM; Wool, Silk, Linen, Velvetten, Cotton Faille, Terrycloth | 30 | 50 | Silk | 80–90 | 11–14 | 〃 | |
| HEAVY; Denim, Duck, Sailcloth | 30 | Heavy Duty | C.C.Poly. | 100 | 16 | 〃 | |
| EXTRA HEAVY; Upholstery, Canvas, Awning | 30 | Heavy Duty | C.C.Poly. | 120 | 19 | 〃 | |
| [KNITS] | | | | | | | |
| LIGHT-WEIGHT; Tricot Power net | 50–70 | 60 | Silk Nylon | 70 | 9 | Light Ball | |
| MEDIUM-WEIGHT; Jersey, Double Knit, Power Net | 30 | 50 | Silk Nylon C.C.Poly. | 70–80 | 9–10 | Light to Medium Ball | |
| HEAVY-WEIGHT; Double knit, Power Net | 30 | 50 | Silk Nylon C.C.Poly. | 80–90 | 11–14 | Medium to Heavy Ball | |
| FAKE-FURS, VELOURS | 30 | Heavy Duty | C.C.Poly. | 90–100 | 14–16 | Ball or Sharp | |
| [LEATHER] | | | | | | | |
| VINYLS FILMS | 30 | 50 | C.C.Poly. | 90 | 14 | Wedge | |
| LIGHT-TO-MEDIUM-WEIGHT | 30 | 50 | C.C.Poly. | 90–100 | 14–16 | Wedge | |
| HEAVY LEATHER | 30 | Heavy Duty | C.C.Poly. | 100–110 | 16–18 | Wedge | |
| [DECORATIVE TOUCHES] | | | | | | | |
| TOP STITCHING | Silk twist | | | 100–110 | 16–18 | Regular | |
| MACHINE EMBROIDERY | Size 50–70 | | | 65–80 | 9–11 | Regular | |

## Replacing Drop-in Cams

30 DROP-IN cams come with the machine.

Open the cam insert cover on the top of the machine.

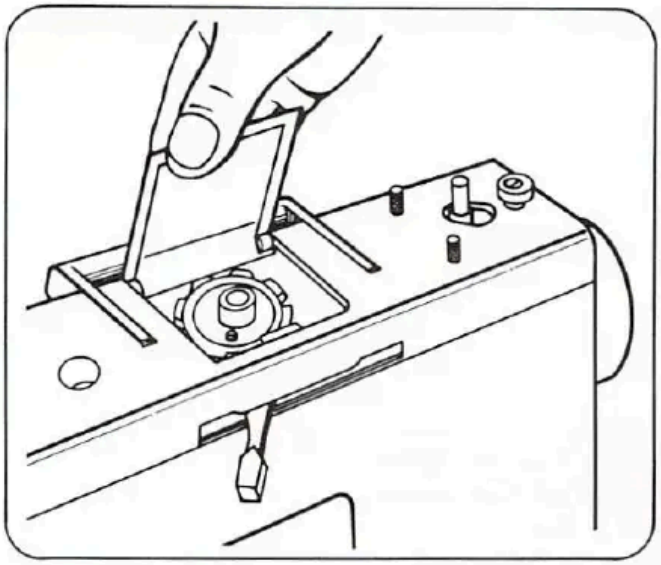

Slide the selection lever to the mark so that the clutch will move back. Then take out the cam. To put in the new cam, match the cut-out with the peg. To start a complete pattern stitch from a very beginning of design, match the guide mark with the clutch.

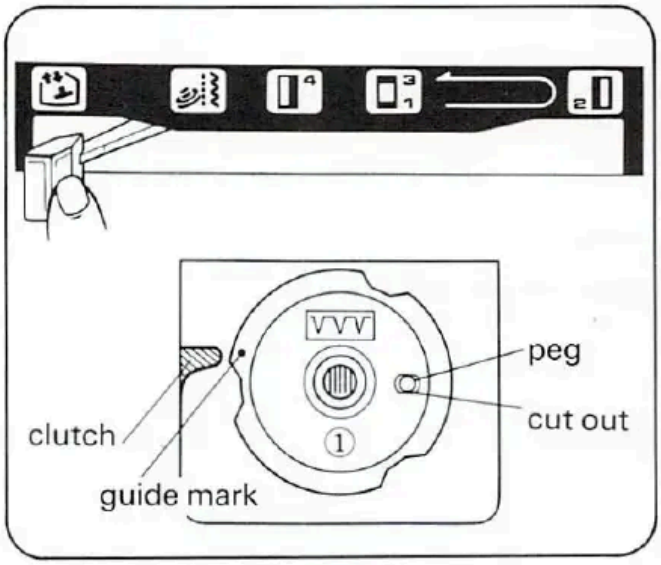


For the actual sewing, always set the selection lever at the mark.

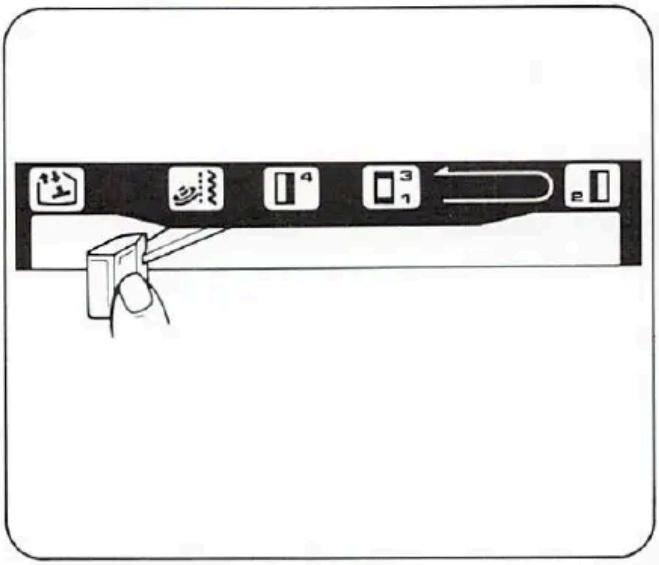

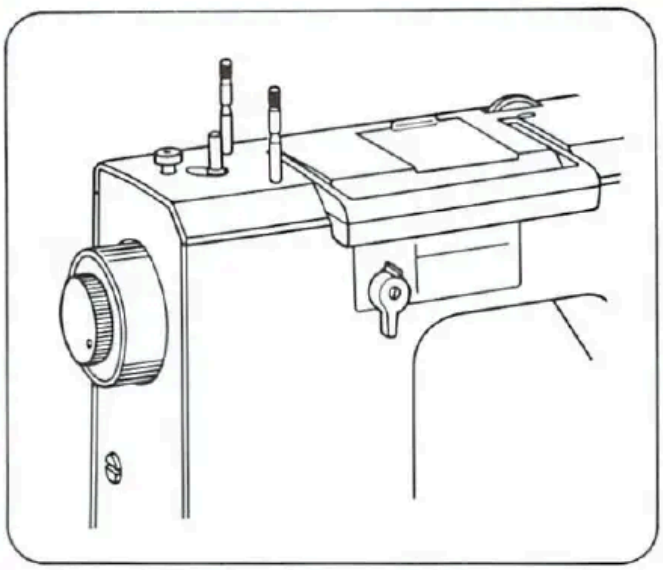

The reverse (super automatic) stitch control is the back of the machine. The stitch is formed correctly by setting at the center of mark (⟷). However, some adjustment may be necessary for certain materials.

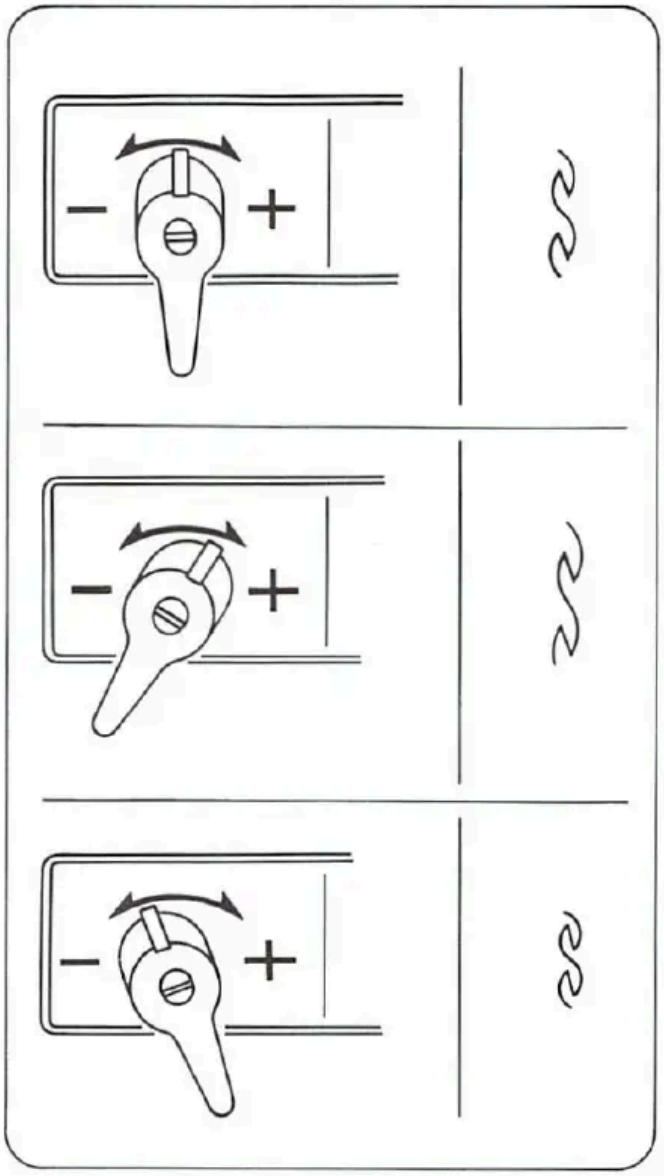

## 4. STRAIGHT SEWING

Set machine as shown.

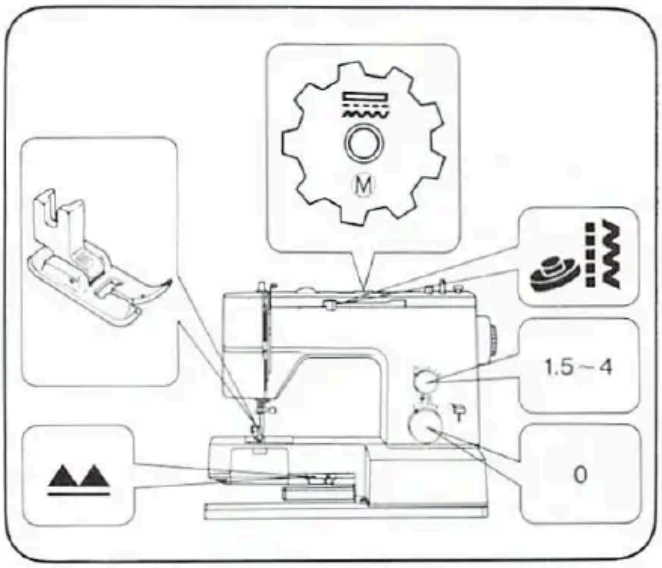


### Stitch Length Dial

Set dial at indicating point ⓐ according to stitch size required.

For a longer stitch, turn dial downwards. For a shorter stitch, turn it upwards.

For normal sewing it is set between 2 and 3.

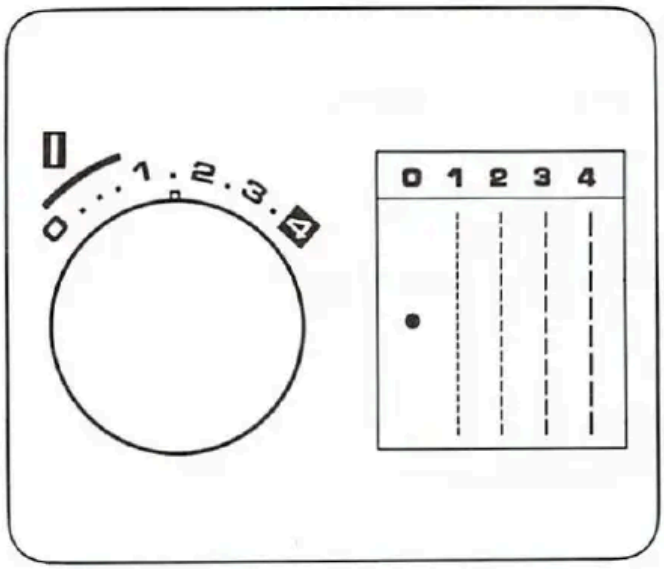

## Double Presser Foot Lifter

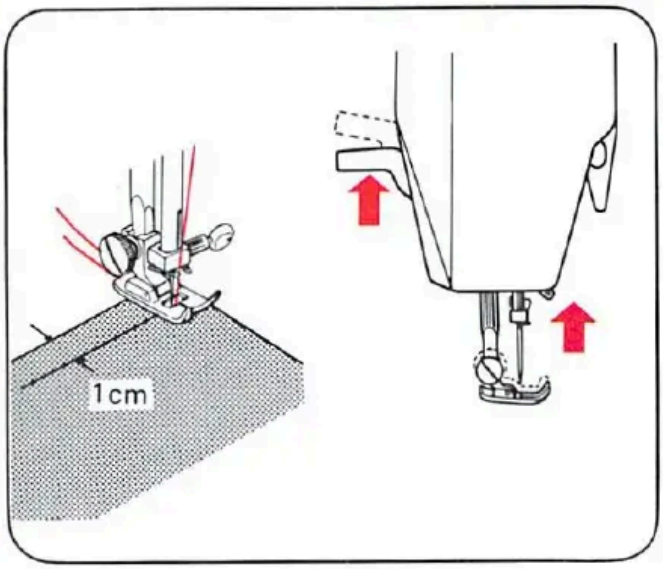


In order to obtain wider gap when using very thick materials, firmly push presser foot lifter up as far as it will go.

Place fabric under foot about 1 cm (0.4") inside the edge.
Lower presser foot lifter.

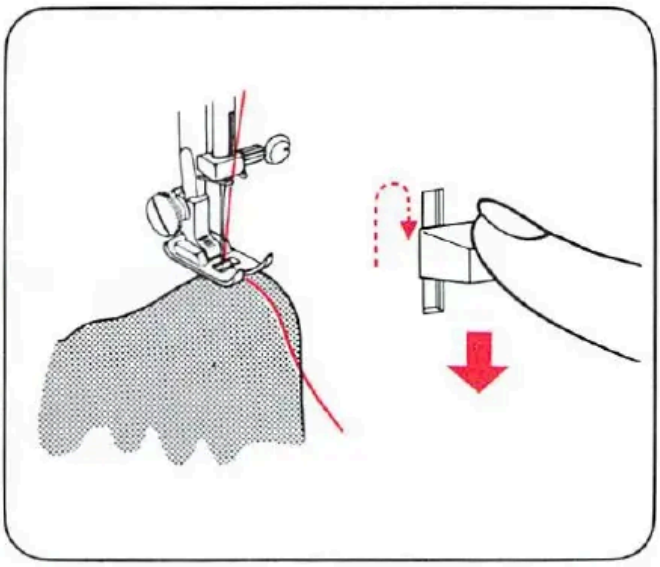

To reinforce seam, sew backwards to the edge of fabric by pushing reverse sewing button.

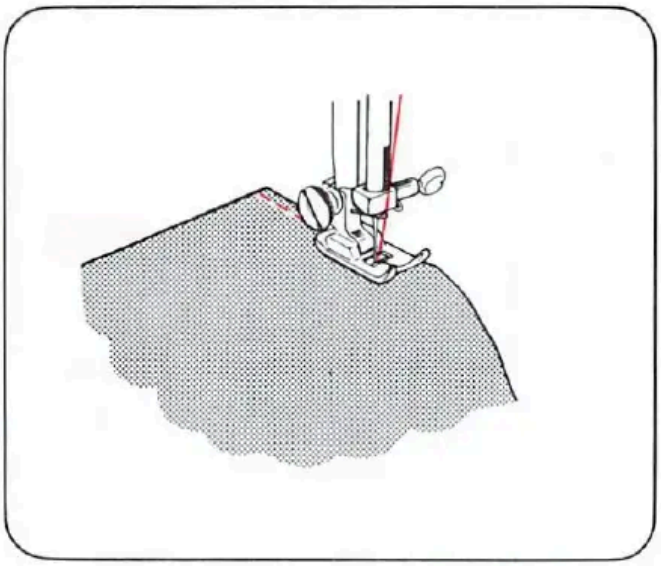

Release button and commence forward sewing guiding fabric by hand as it is fed.
Never pull material.

Sew reverse stitches for reinforcement at end of seam.
Draw fabric to left when sewing is finished.

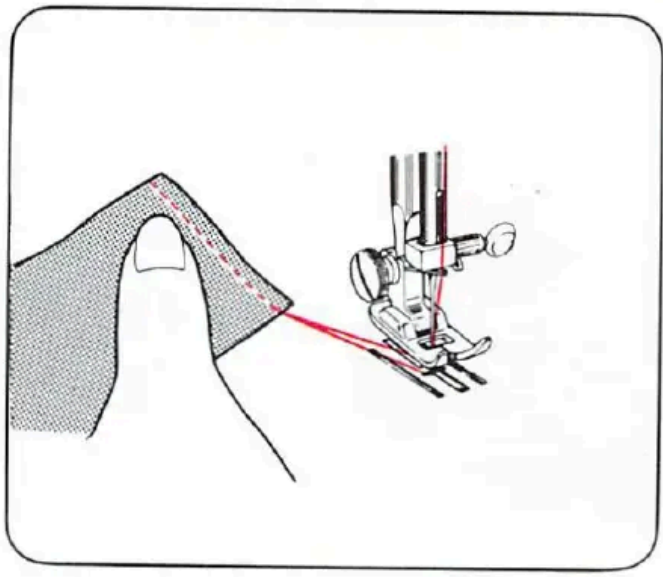

Cut threads with thread cutter behind presser bar.

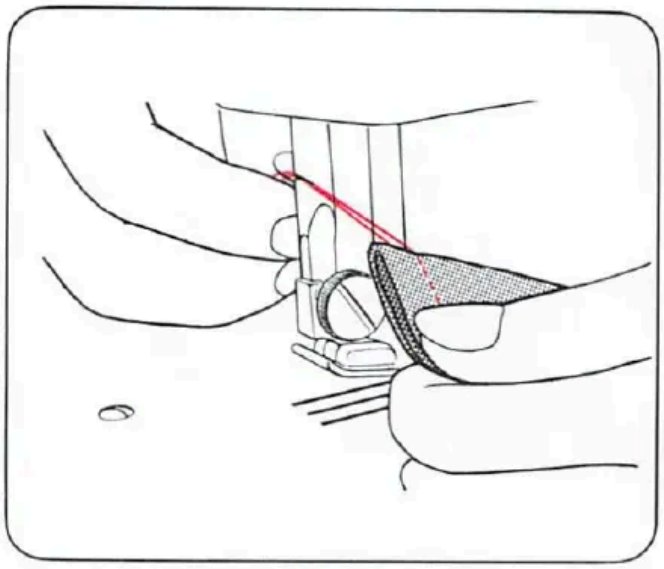

## Adjusting Thread Tension

Test stitch performance on a scrap of material you are going to use.
With correct tension (ⓐ), upper and lower threads tension is equal and strong enough to lock both threads in center.
If upper tension is too tight (loose), upper (lower) thread lies straight along upper (lower) surface of fabric (ⓑ.ⓒ). Correct by turning tension dial

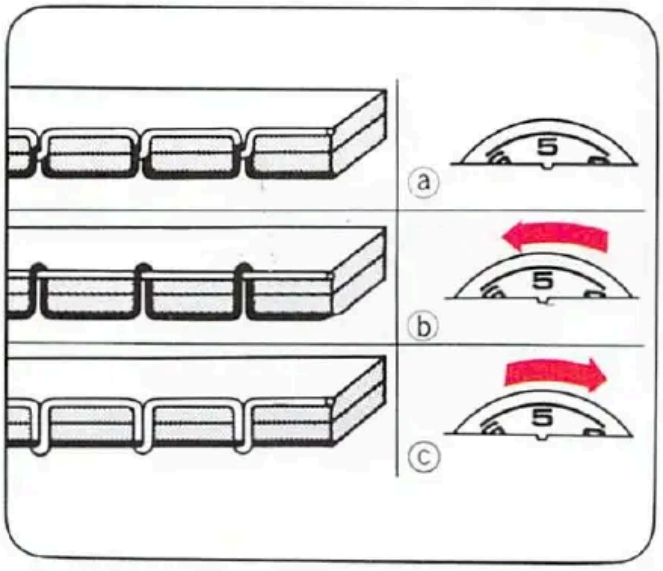

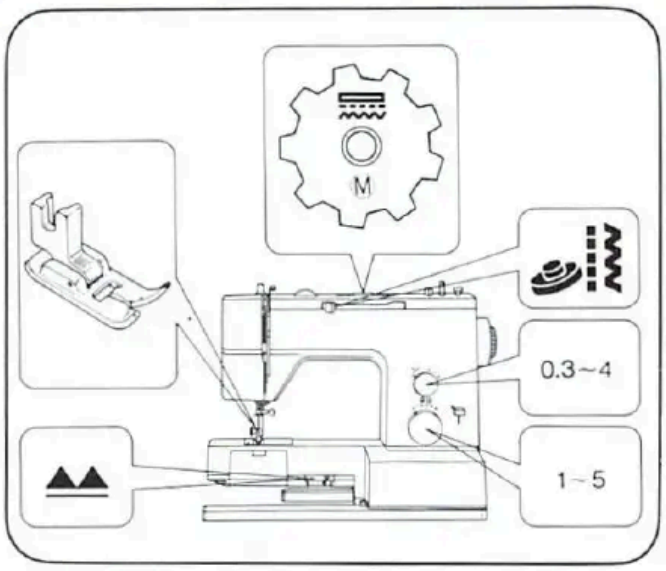


## 5. ZIGZAG SEWING

Set machine as shown.

To prevent seam ends unravelling, set machine for straight stitch and sew in reverse at beginning and ending of seam.

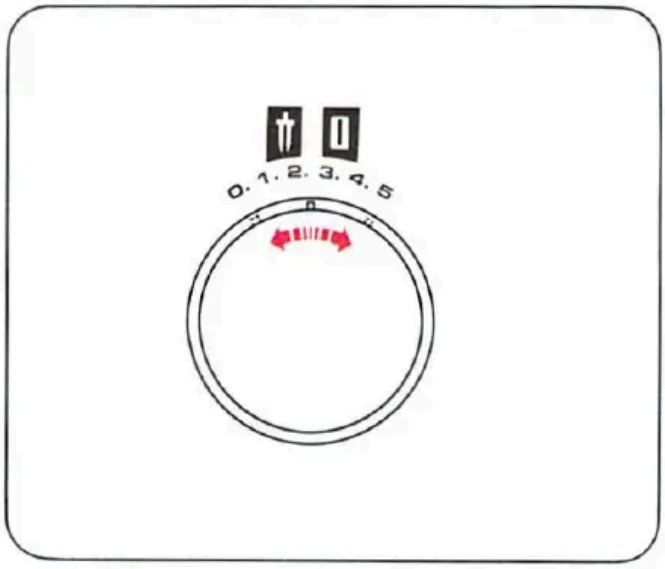


### Zigzag width control

Set control at required number. Larger the number, wider the stitch.
Set it at O for straight sewing.

Make sure needle is in upper position when you set control.

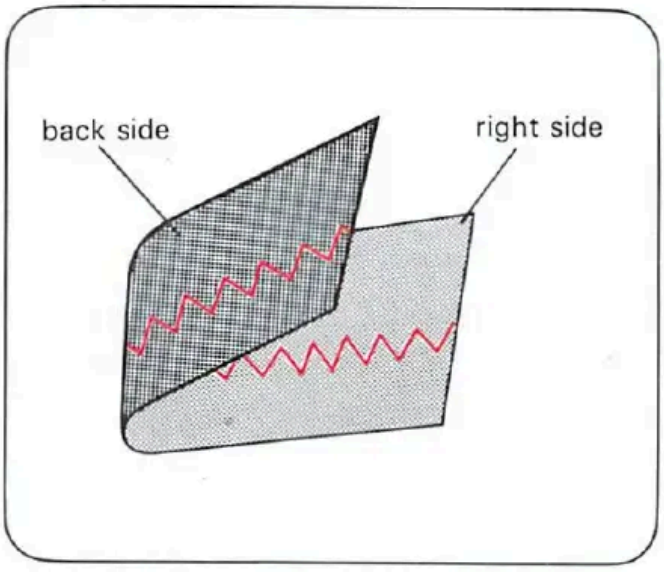


### Thread Tension for Zigzag Stitch

Better-looking zigzag stitching requires less upper tension than straight stitching.
Loosen upper tension slightly.

## 6. MAKING BUTTONHOLES

Set machine as shown.

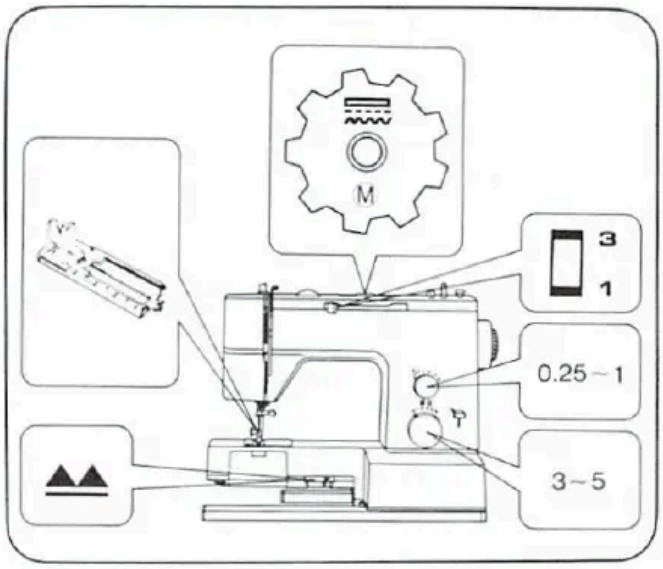


### Determine Length

Measure diameter and thickness of button and add 0.3cm (1/8") for bar tacks.
Mark buttonhole size on material.

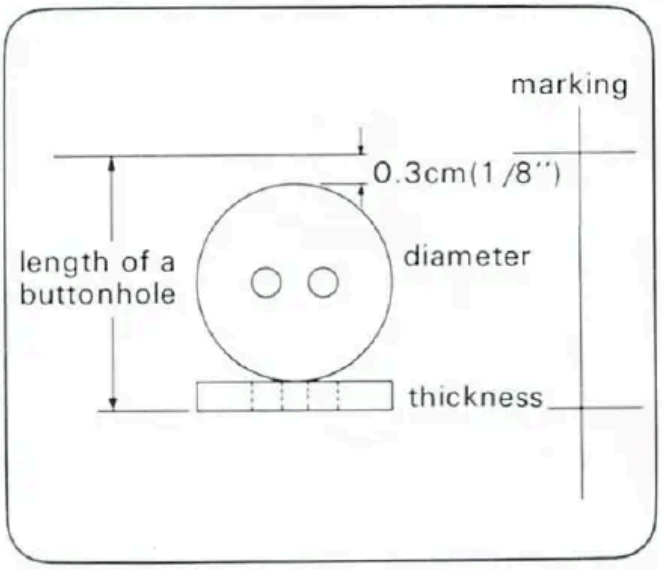


### Determine Width

Determine width according to diameter of button, its thickness, and kind of material.

Attach buttonhole foot.
Completely push back sliding part ⓐ of buttonhole foot.
Place material under foot so that marking of buttonhole passes through centre of foot and arrow ⓑ of foot indicates beginning line of marking.

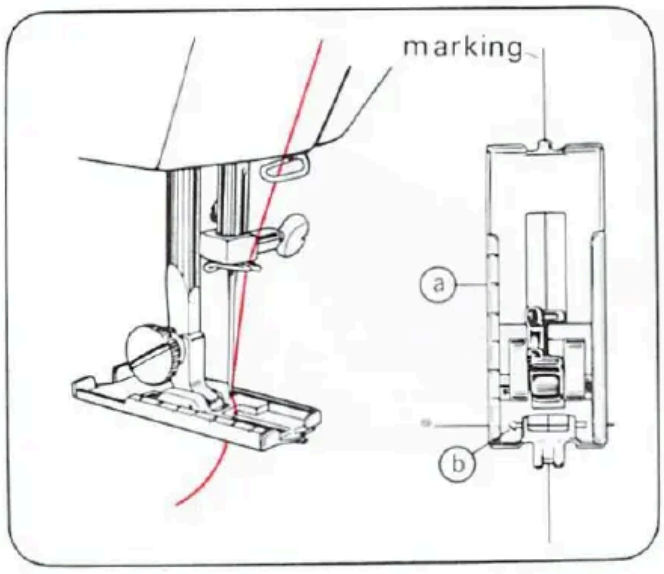

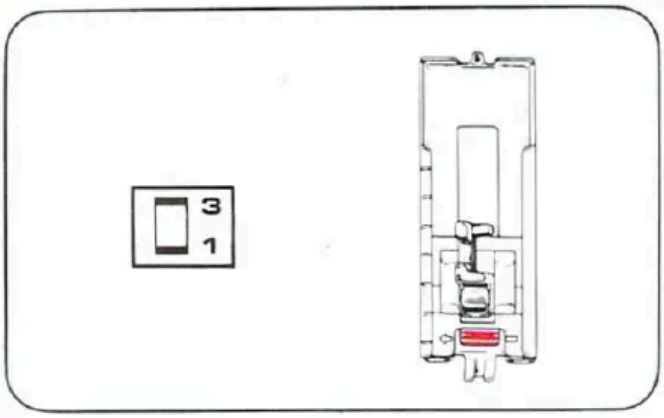


**Bar tacking:** Set pattern selection dial to 1 ( $\square^{3}_{1}$ ) and sew 5-6 stitches.

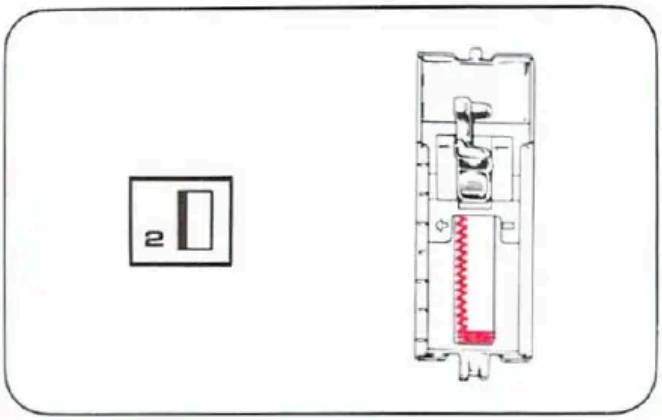


**Left side:** Change pattern to 2 ( $_{2}\square$ ). Sew left side from front to back until it reaches end line.

Remember the point where arrow shows so that it is not necessary to mark end the lines for all buttonholes.

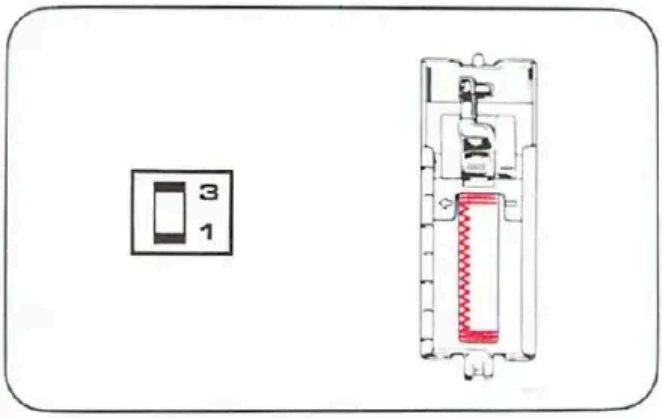


**Bar tacking:** Change pattern to 3 ( $\square^{3}_{1}$ ) and sew 5-6 stitches.

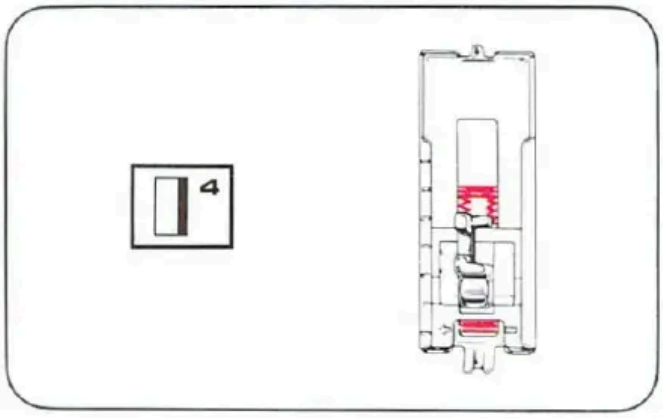


**Right side:** Change pattern to 4 ( $\square^{4}$ ) and sew right side until it reaches the first bar tack.

**Quick finish:** To prevent unstitching, set zigzag width at 0 and proceed and for a few stitches.

## Left and Right Side Balance of Buttonhole

Stitch density on right and left sides of buttonhole can be adjust by buttonhole balance control dial.
This dial should usually be in a neutral position (between "+" and "−")

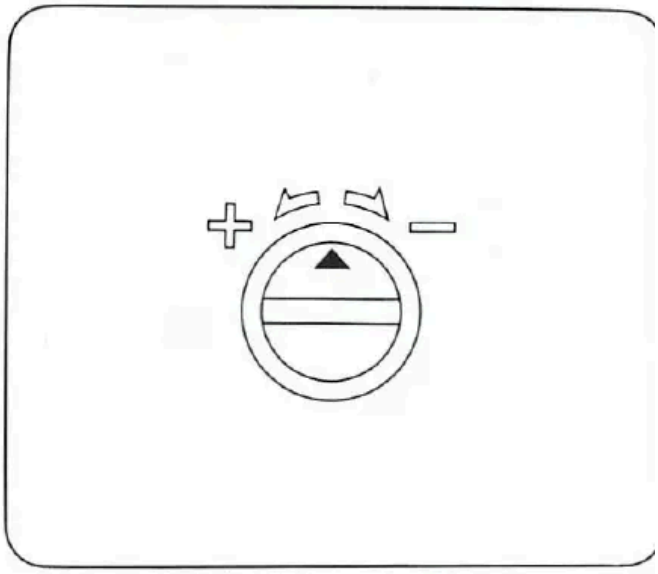

If the stitches on the right side of the buttonhole are too close together, turn the dial to the left (+).
∗Turning dial to left opens right side and closes left side.

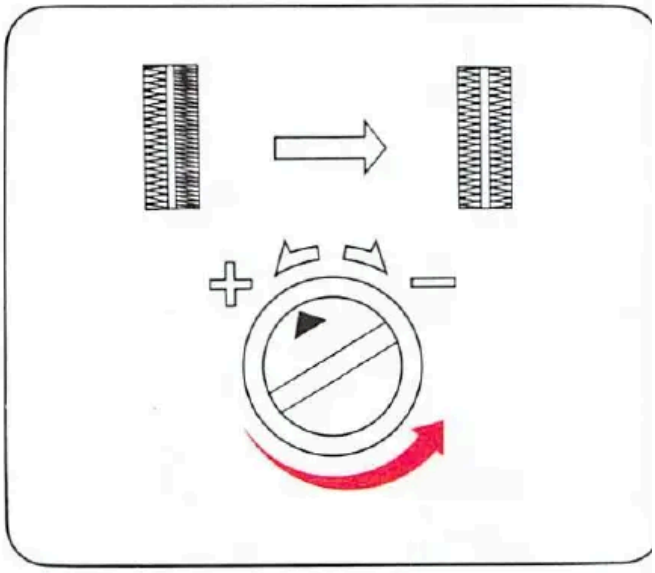

If the stitches on the right side of the buttonhole are too open, turn the dial to the right (−).
∗Turning dial to right closes right side and opens left side.

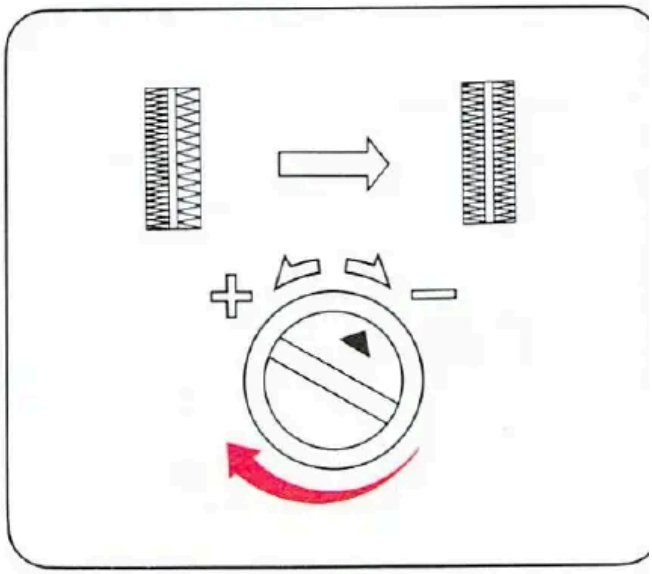

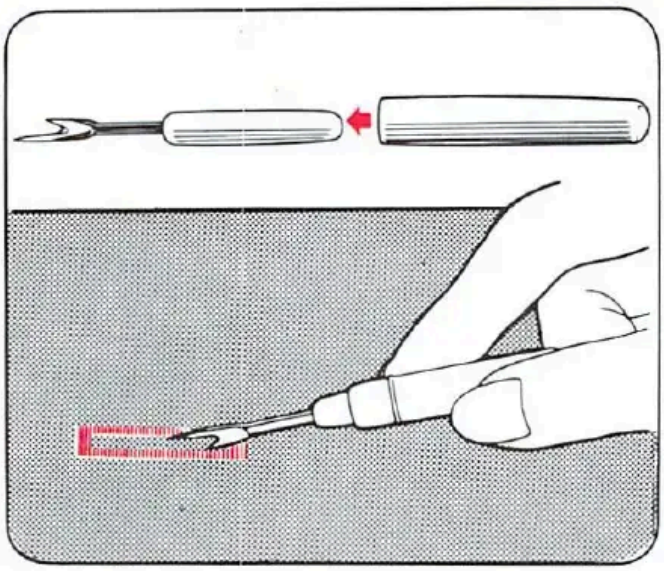

## Cutting Buttonholes

Stick a needle through bar tacks to prevent over-cutting.

Cut buttonhole along center with buttonhole cutter.

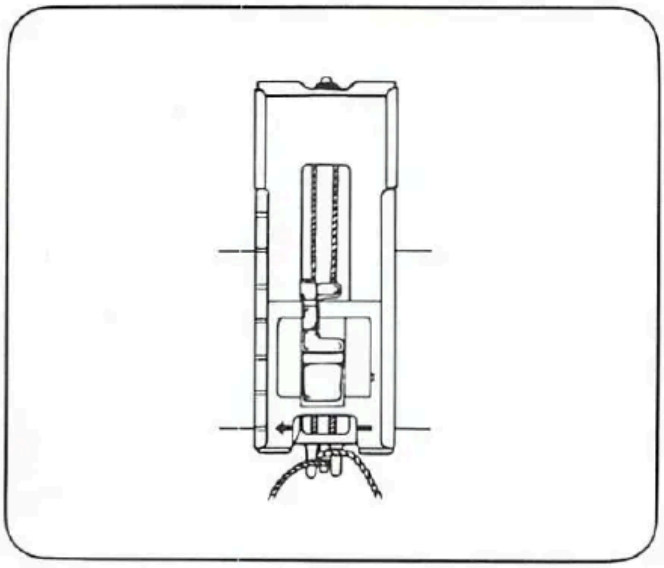

## Corded Buttonholes

For stretch fabrics such as knits, a corded buttonhole is effective to keep finished buttonhole in shape.
Hook filler cord on top spur and lead ends of cord under foot, pull taut, and hook them to bottom notches as shown.
Proceed with stitching as for regular buttonholes.

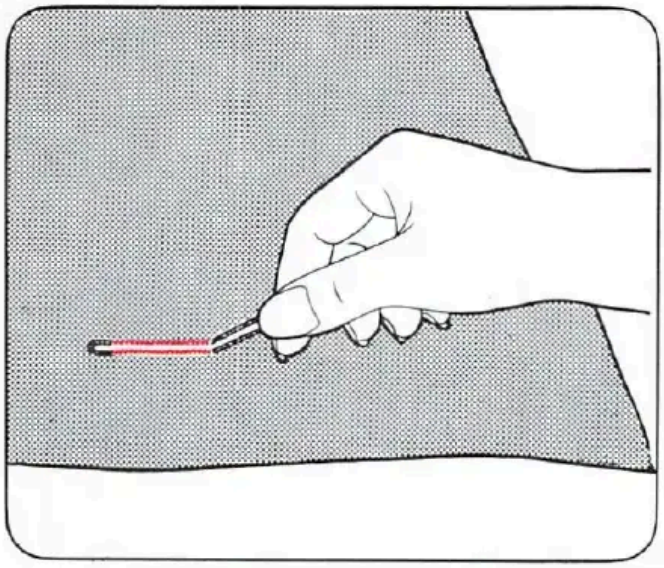

When buttonhole is completed, pull filler cord ends so that loop on the other end disappears into buttonhole stitching.
Thread ends of cord to reverse side and tie, or cut both ends of cord.

## 7. SEWING ON BUTTONS

Set machine as shown.

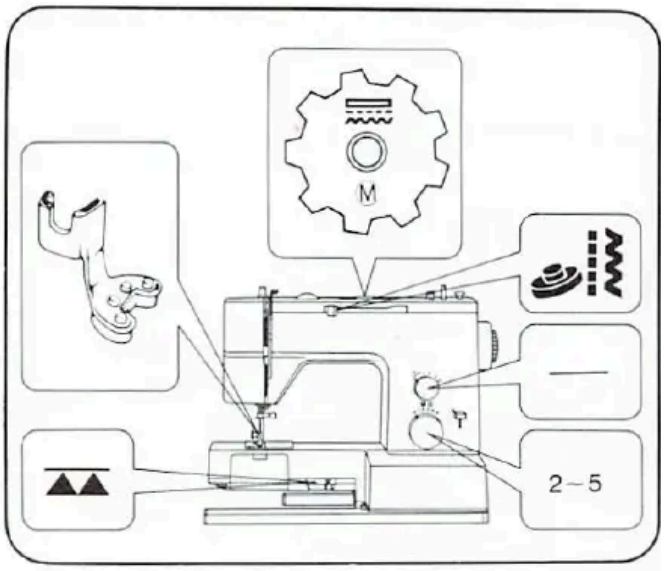


Position a button and material under foot. When needle comes to left side of stitch, lower foot. Raise needle and adjust zigzag width so that needle comes to right hole of button.

Run machine at medium speed and sew 5-6 zigzag stitches.

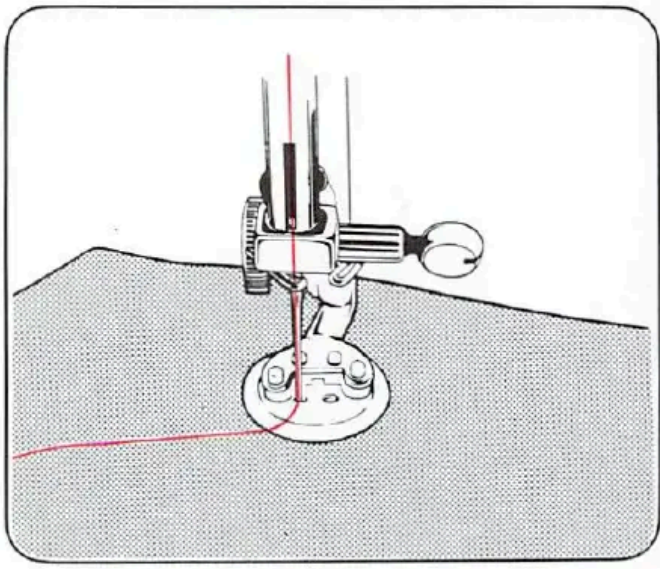

Stop machine when needle is in upper position.

ⓐ Set zigzag width control to 0 and sew 3-4 stitches to prevent unstitching.

OR

ⓑ Draw out work and cut off threads.

Draw thread ends through to wrong side and tie a knot.

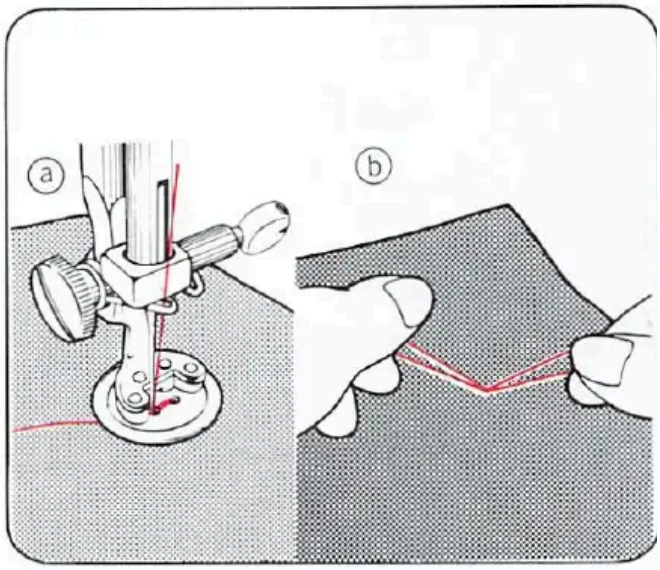

## 8. OVERCASTING

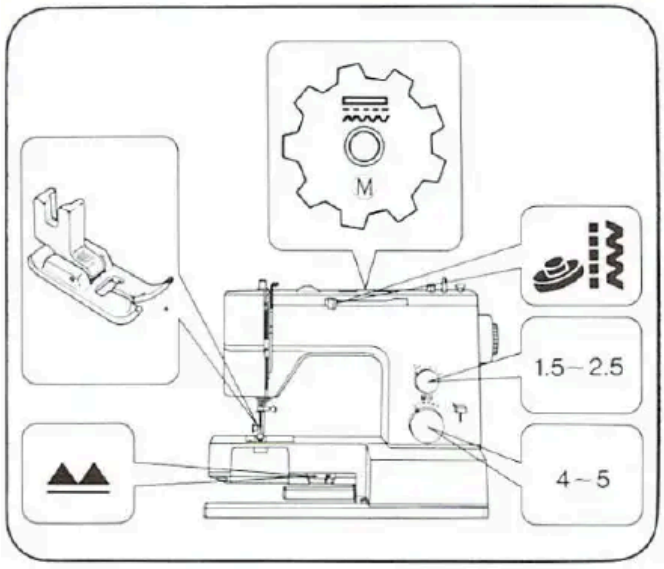


**For light weight material:**
Set machine as shown.

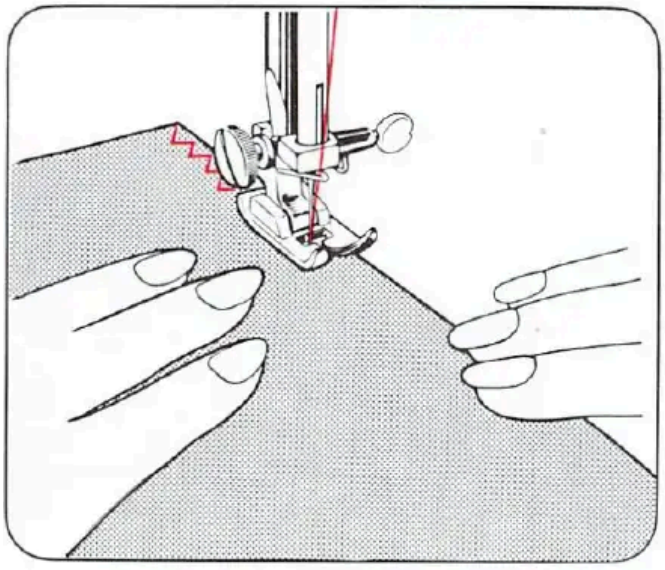

Sew carefully so that all stitches on right side are flush with edge of fabric.

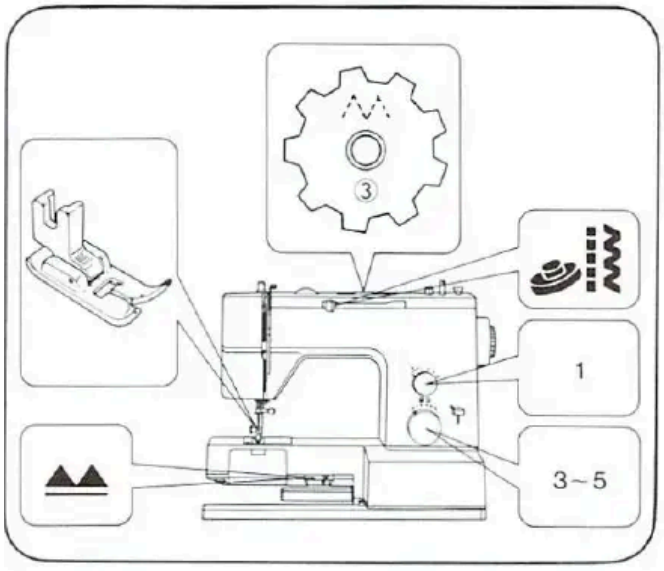


**For thick and elastic material:**
Set machine as shown.
Sew in the same way as above.

# 9. OVERLOCKING

Overlocking stitches make it possible to sew and overcast seams at the same time.

Set machine as shown.

㉑ **For medium, thin material**
㉖ **For medium, thick material**

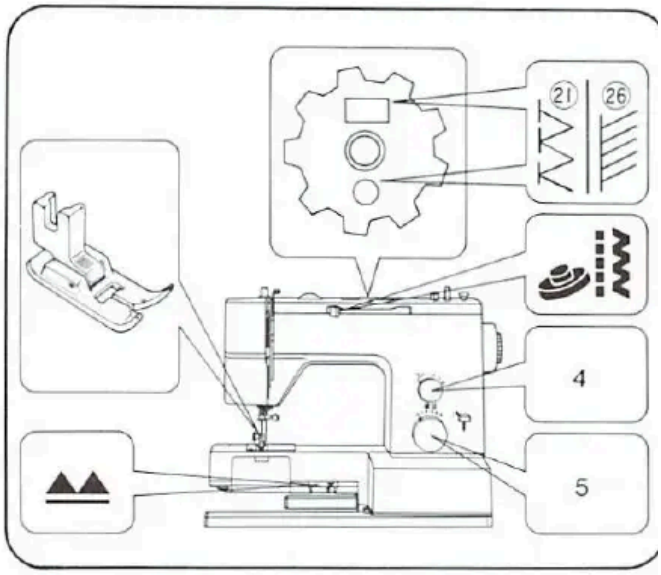


Put two pieces of cloth together with right sides facing and sew.

To prevent edges from fraying, sew so that right side stitches drop outside the edge of material.

In some cases overlocking stitches can be used for overcasting.

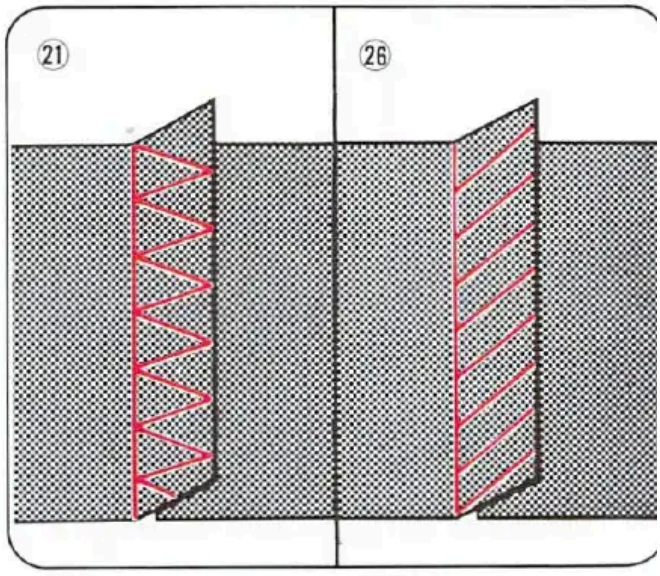

## 10. BLIND HEM STITCH

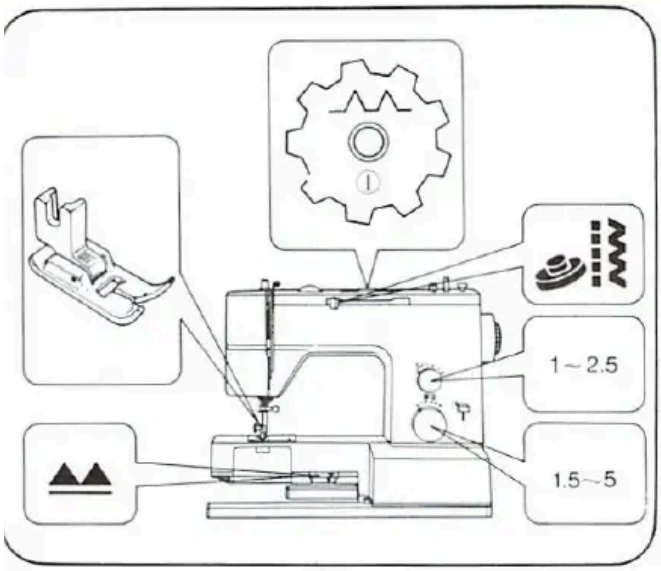


Set machine as shown.

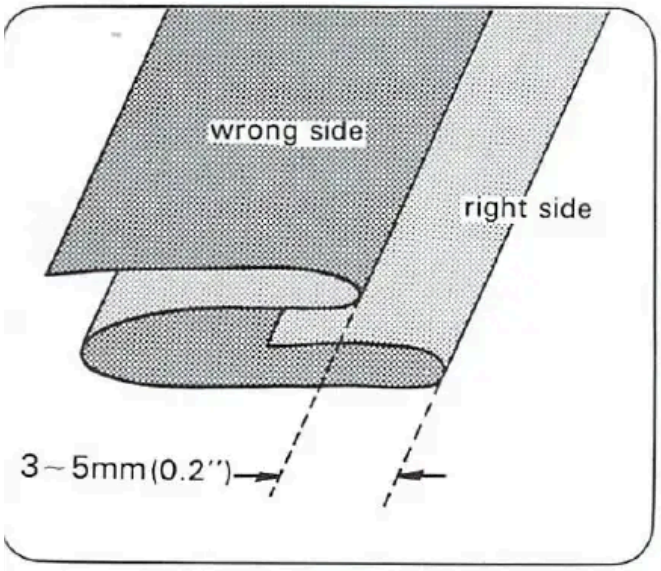


Fold material as shown and place it under foot.

For a neater finish, it is preferable to baste or iron hem beforehand.

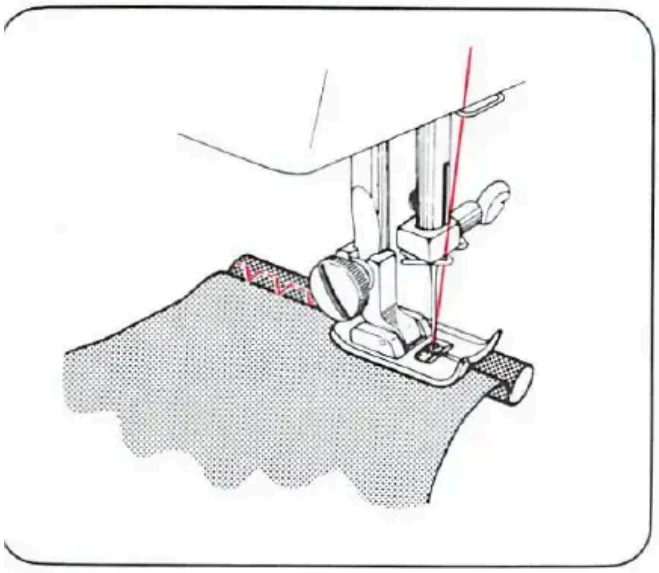

Sew carefully, so that straight stitches are made on hem edge, and slanting stitches pierce only one or two threads of fold.

ⓐ Correct seam.
ⓑ Needle is catching edge of fold too much.
ⓒ Needle is not catching edge of fold at all.

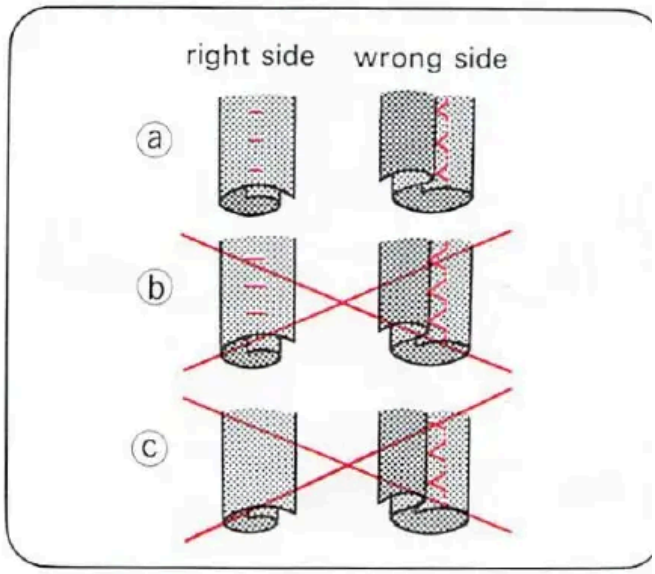


## Elastic Blind Hem Stitch

For elastic materials, set machine as shown and sew in the same way as for normal blind hem stitch.

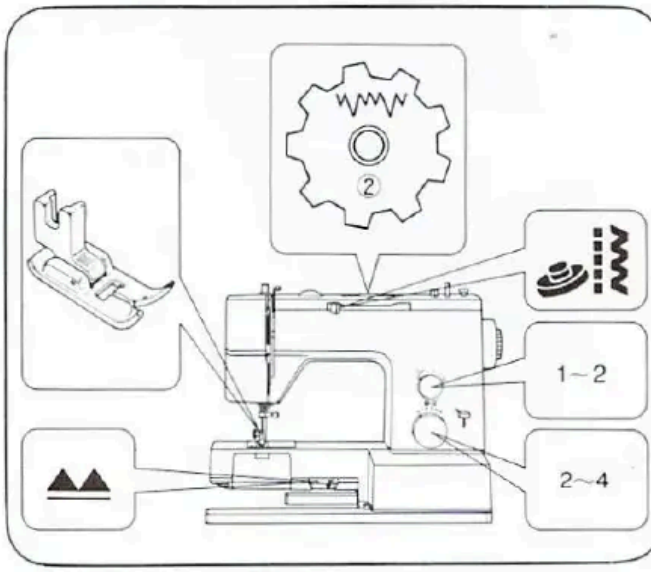

## 11. STRETCH SEAMS

A ball-point needle is essential. Paper may be laid under knits for smoother feeding.

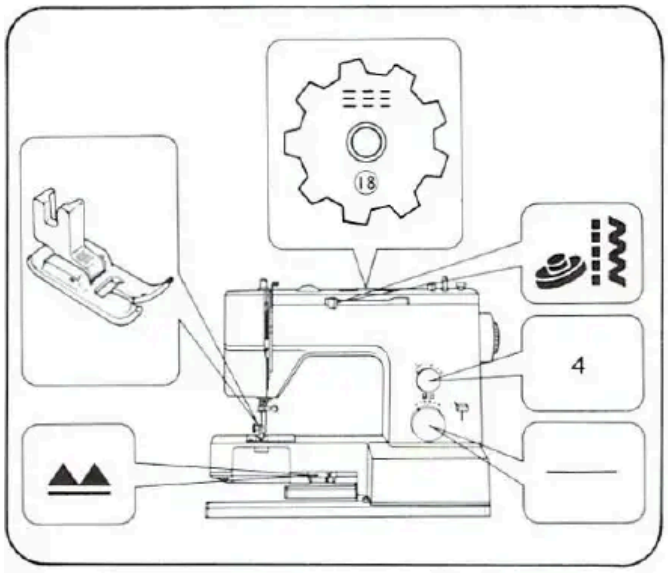


ⓐ **Medium-weight fabrics**··· double knit, jersey.

Apply elastic triple stitch.

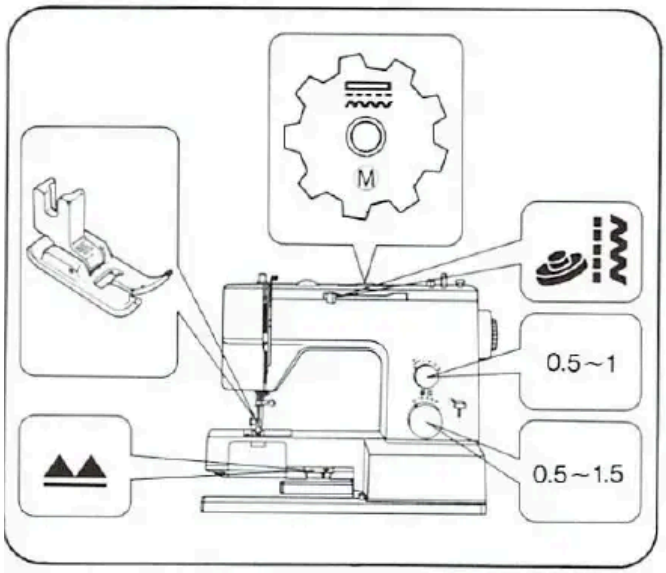


ⓑ **Light-weight fabrics**
Apply small zigzag. Reduce upper and lower thread tension.

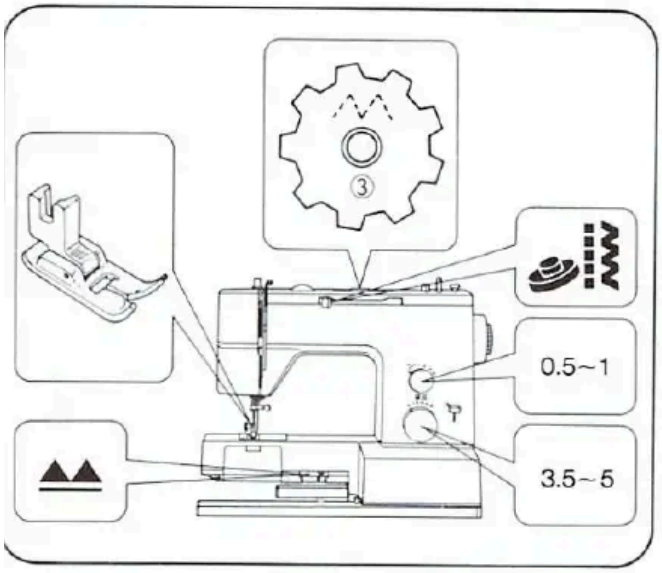


ⓒ **For very elastic fabrics**··· spandex (power net)

Use lapped or abutted seam. Apply multiple zigzag.

## 12. SHELL STITCHING

Silk, nylon organdy or similar sheer fabrics are suitable.

Set machine as shown.

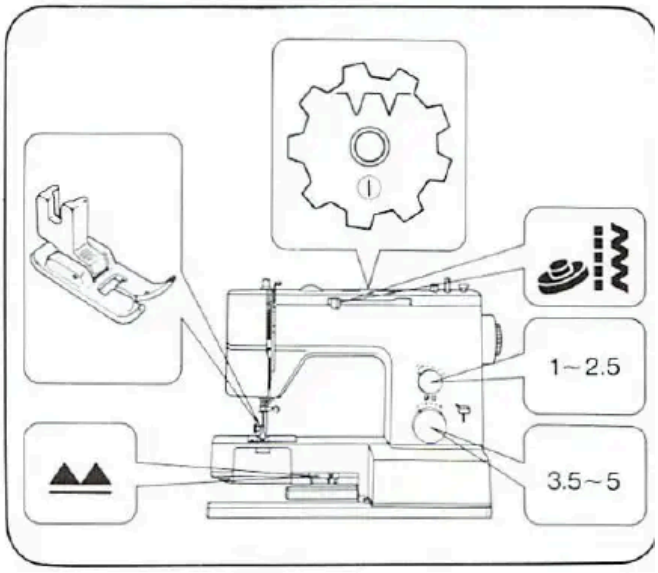


Fold edge of material. With folded edge to left, place it under presser foot.

Pull thread ends towards back when starting sewing.

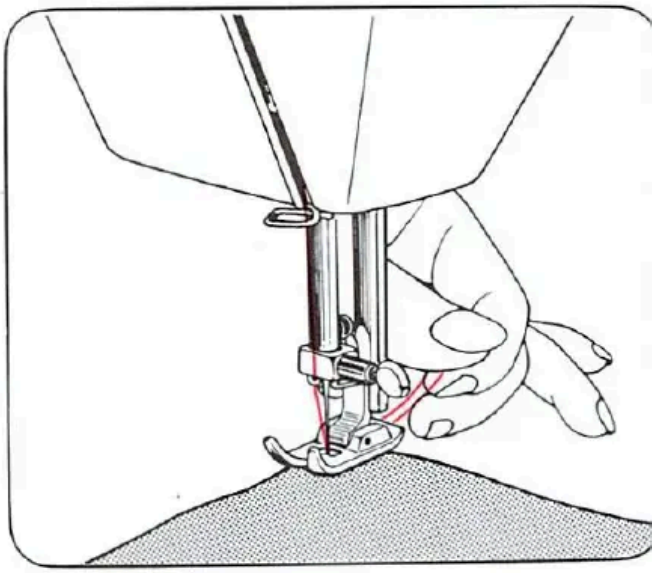

Make sure needle misses raw edge of fold when it moves side ways.

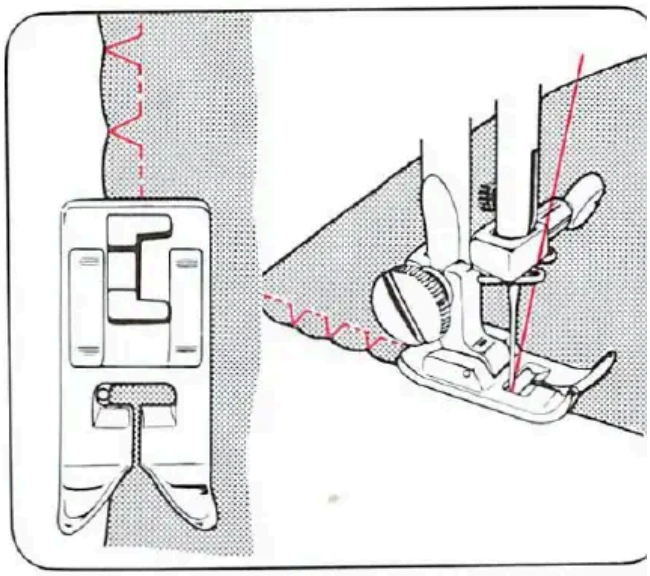

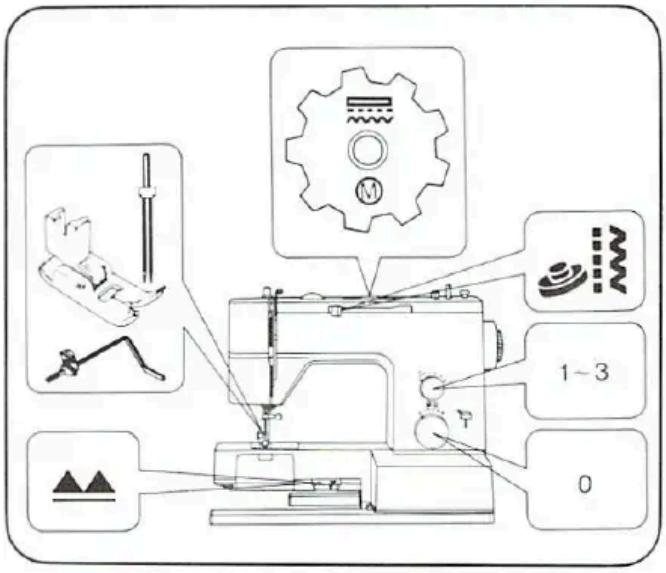


## 13. PIN TUCKING

Set machine as shown.

For better appearance, use sheer material and tighten lower thread a little.

For twin needle threading, see p. 14.

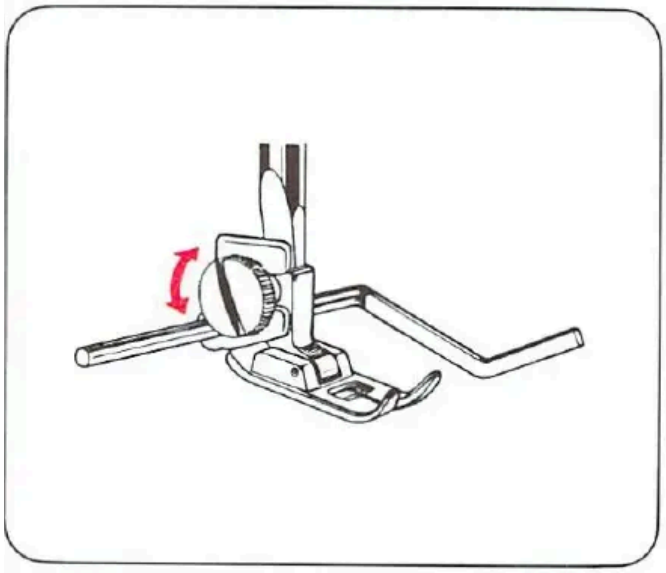

Loosen presser foot thumb screw and insert square cut of quilting guide holder between screw and foot.

Tighten screw.

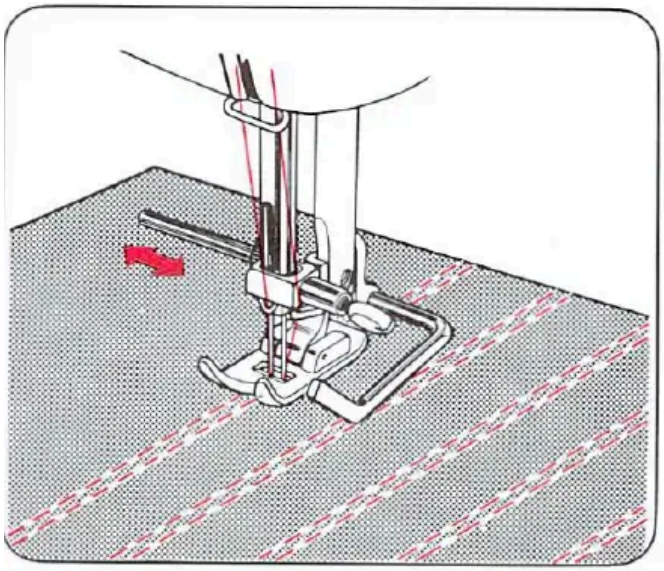

Mark first line with pencil or tailor's chalk, and sew.
From second line, just sew, following seam of first line using guide.
Interval between seams can be adjusted by moving guide in direction of arrow.

## 14. QUILTING

Set machine as shown.

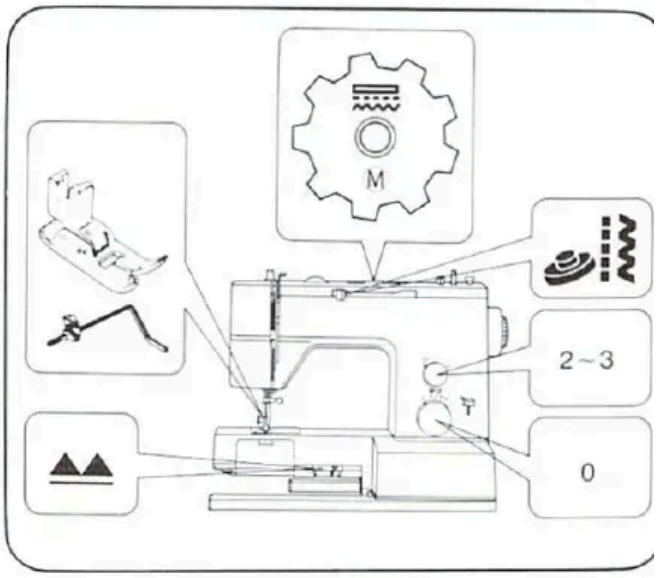


Baste layers of material to prevent them from slipping out as you sew.

Attach quilting guide and sew in the same way as pin tucking.

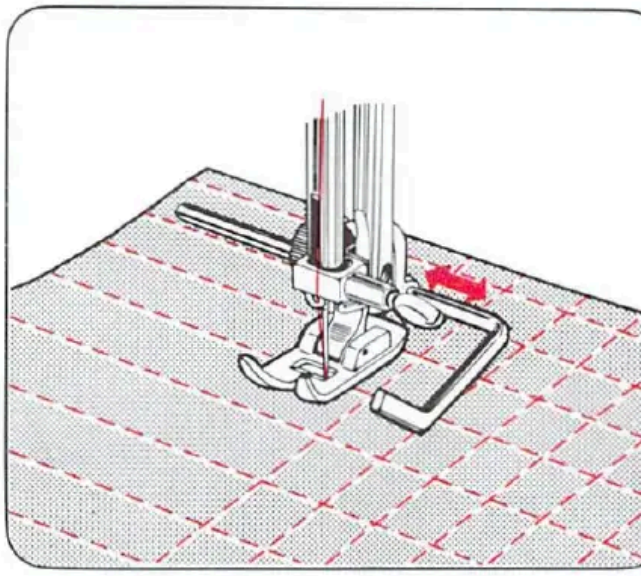

## 15. LAPPED SEAM SEWING

Set machine as shown.

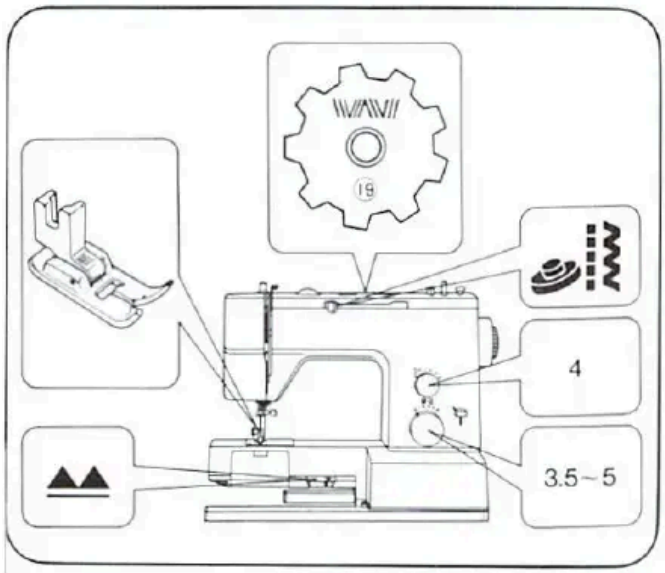


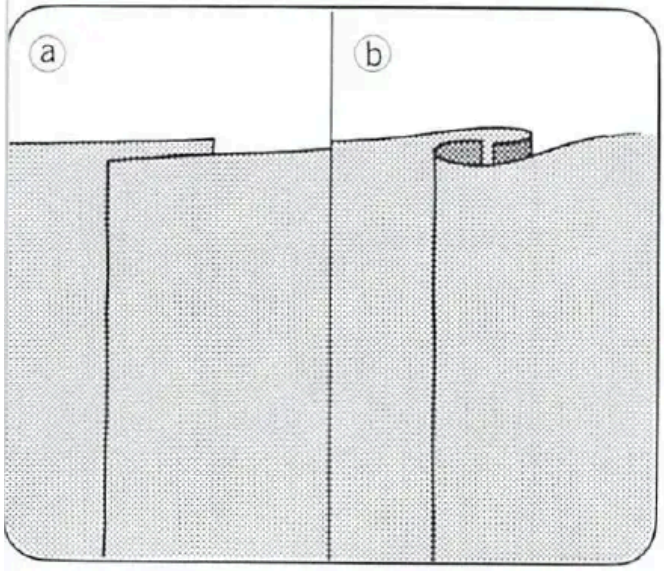


Place one piece of fabric over another according to the width of stitch size.

ⓐ For non-fray fabrics.

ⓑ For easy to fray fabrics.

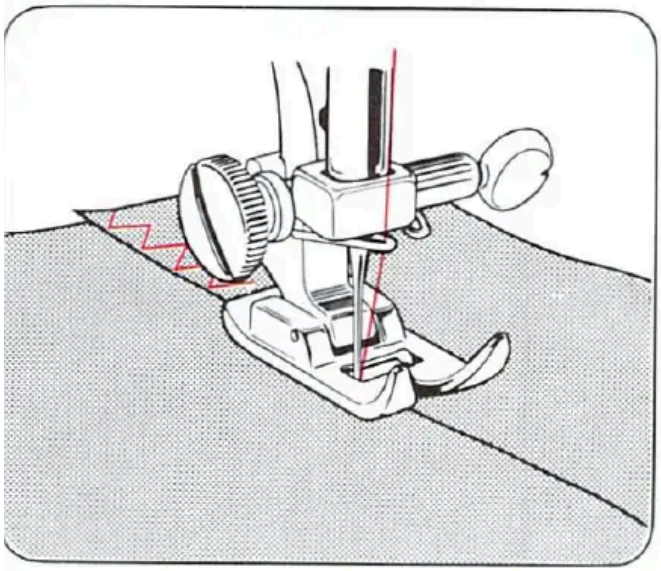

Sew over folded area from right side.

# 16. MENDING

## Patching

Set machine as shown.

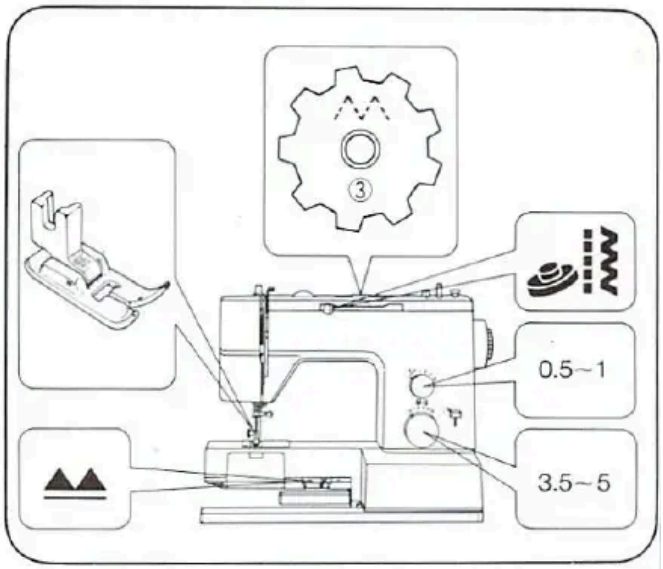


Place the patch over the worn part.
Sew along the edge of the patch on the right side. Trim away the worn part close to the seam on back side.

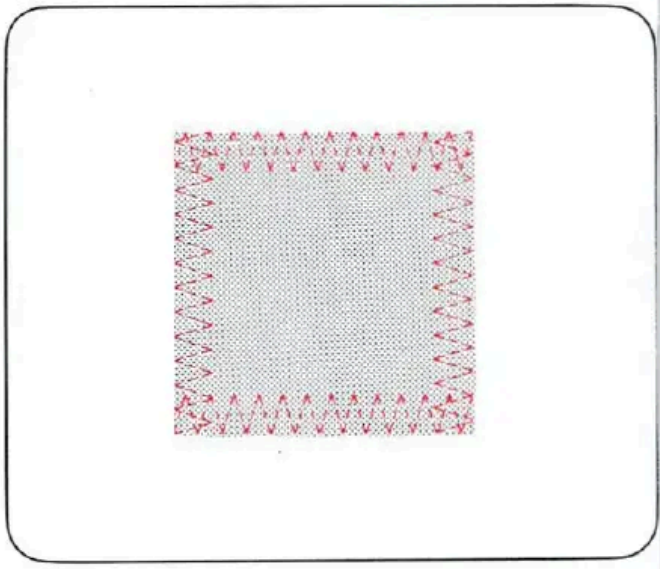

## Mending a Rip

Set machine in the same way as for patching.

Sew the edges of tear together first.
Then sew two more seams on either side.

A piece of gauze can be placed underneath to reinforce the rip.

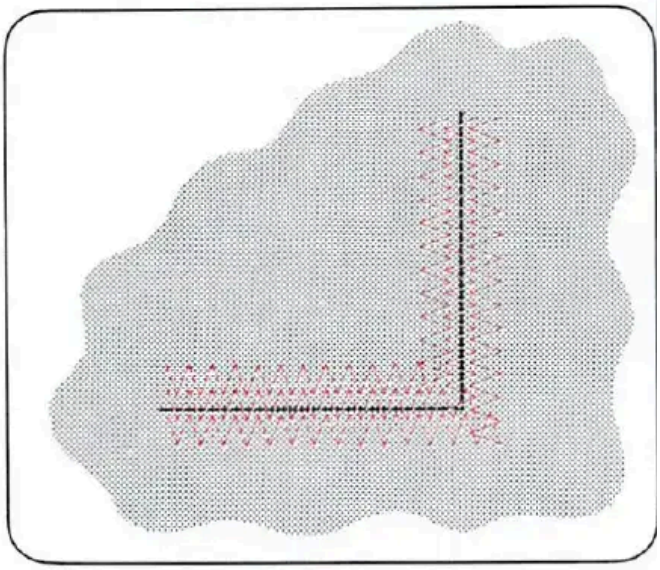

## 17. APPLIQUE WORK

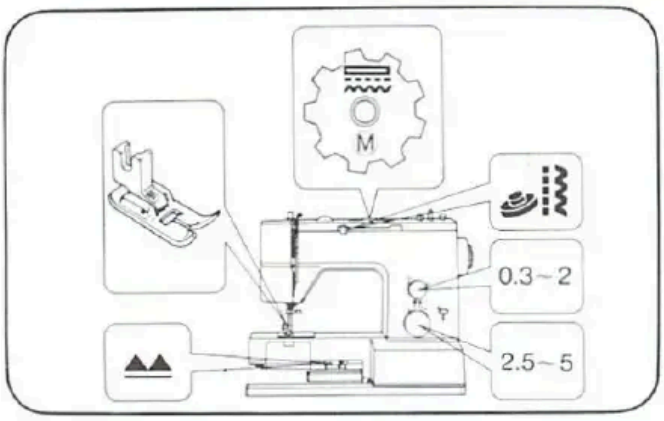


Set machine as shown.

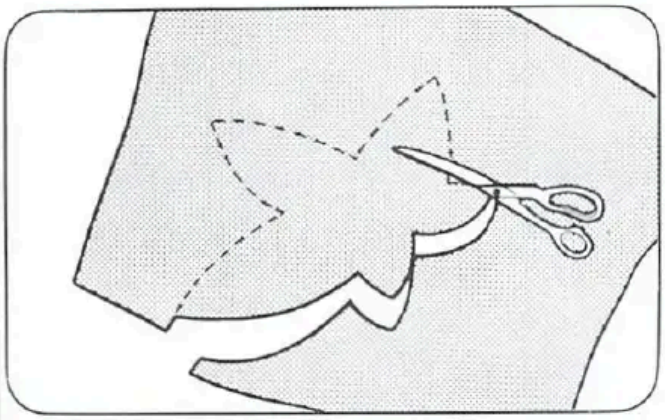

Draw design on material to be used as an applique and cut it out. Place cut-out on base material and baste it.

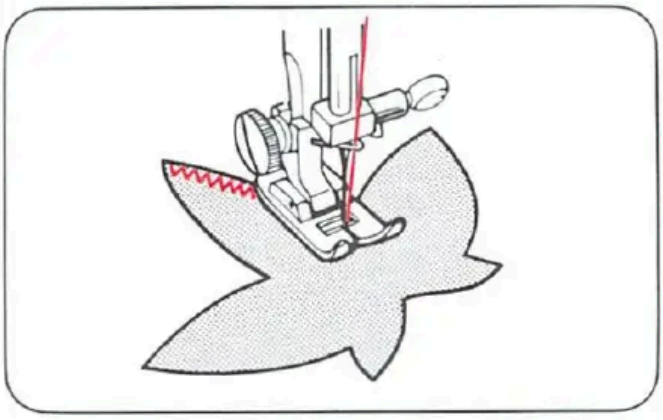

Sew around outline with zigzag stitch adjusting stitch length and width according to shape and size of cut-out and type of base material.

To change direction at corners, or to sew very small circles, stop machine, positioning needle just away from edge of cut-out, lift presser foot and turn material. Lower presser foot and continue sewing.

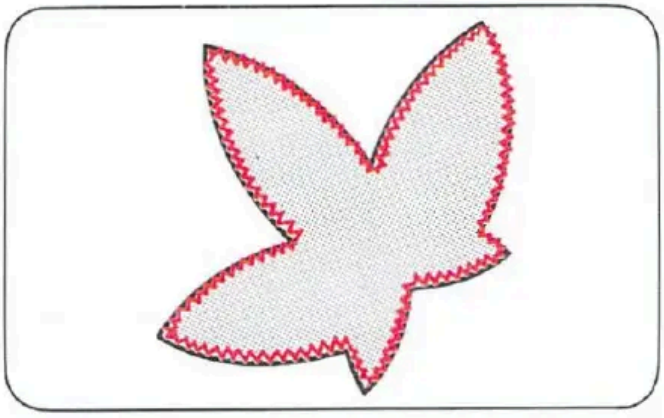

Sew a few stitches at end with zigzag width at 0.
This is prevent unstitching.

## 18. EMBROIDERY

Set machine as shown.

Remove foot, and holder screw.

To avoid lower thread being pulled up, reduce upper thread tension.

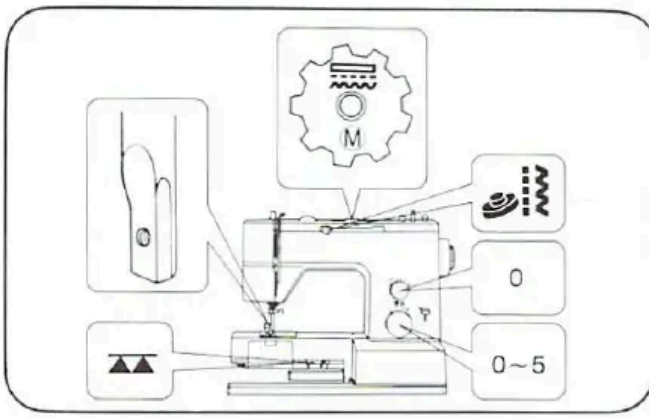


For good embroidery, it is important to use correct needles and thread.

Use thin embroidery silk for upper thread and a thinner silk of same kind and colour for lower thread.
Trace your design on material and centre it in embroidery hoop. Make sure material is taut.

| Needle | Thread |
|---|---|
| No. 9 | 120~100 |
| No. 11 | 100~80 |
| No. 14 | 60~50 |

Pull out lower thread by turning hand wheel towards you while holding upper thread lightly.

Lower presser foot lifter.

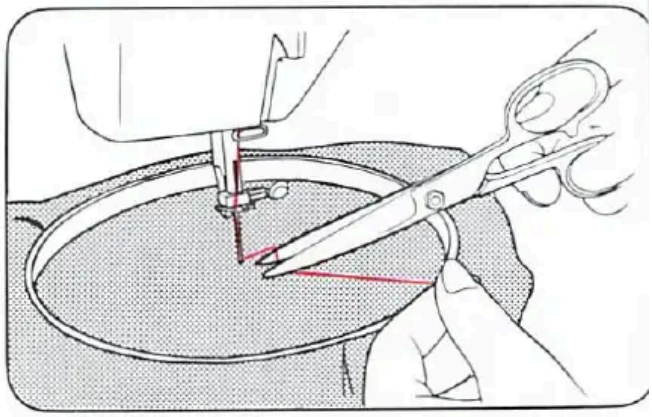

Hold both threads and start sewing along outline of design with satin stitch.

Continue sewing guiding hoop by hand.

To finish filling, sew several stitches with zigzag width at 0.

Lay typewriting paper underneath when embroidering sheer fabric.

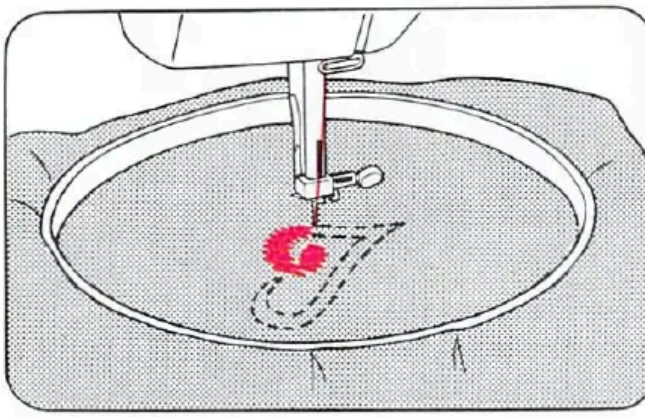

# 19. DECORATIVE TOUCHES

## Automatic Embroidery

Put in an embroidery cam. (See P. 17 for how to set cams.) Braids, edging and a point decoration are easily and quickly done. A variety of cams is shown on P. 46 Make sure to set the machine correctly corresponding to the type of cam.

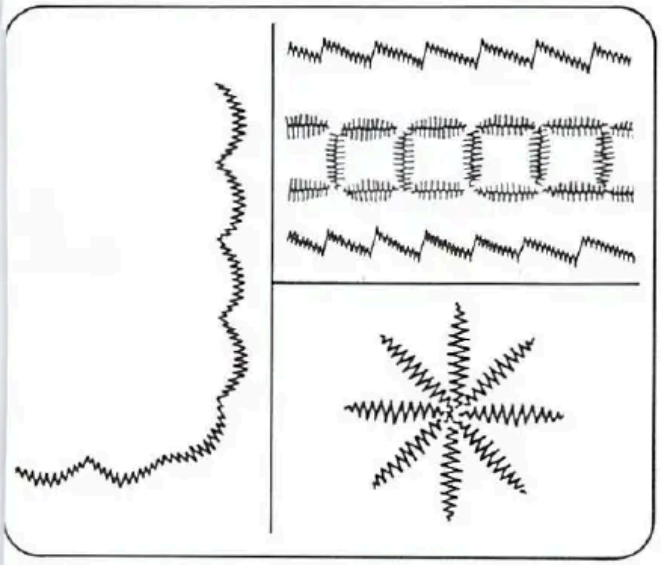

**Single cams**

Single cams for automatic stitches (satin stitch filling in type)
–Cams No. 3, 4, 5, 6, 7, 8, 9, 10, 11, 12, 13, 14, 15, 16, 17.

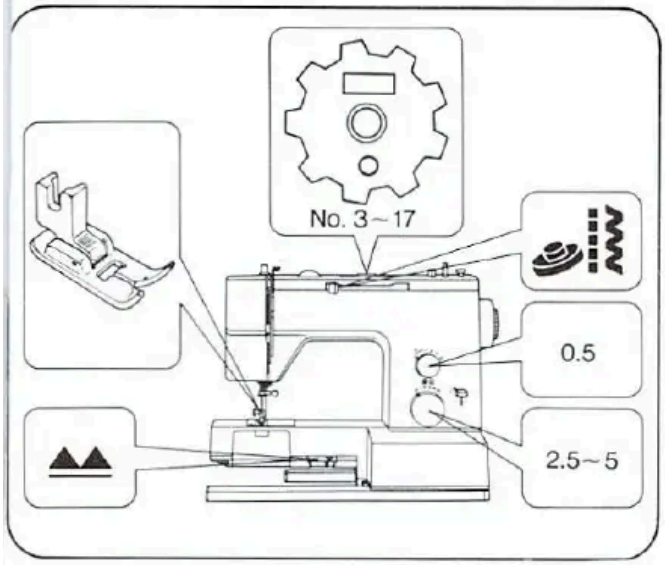


Set machine as shown.

**Double cams**

Double cams for reverse (super automatic) stitches.

–Cams No. 18, 19, 20, 21, 22, 23, 24, 25, 26, 27, 28, 29, 30.

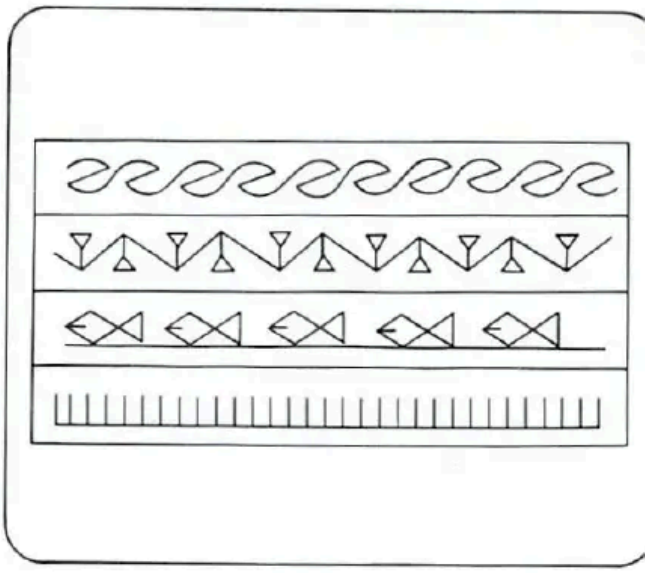

Set machine as shown.

To correct the length of reverse (super automatic) stitches, see P. 18.

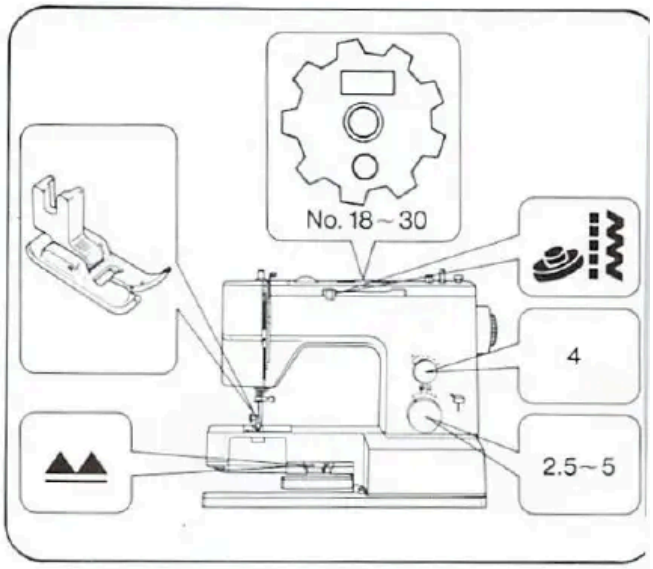


**Embroidery by twin needle**

Make sure to set the zigzag width below 2.5.

For threading, see P. 14.

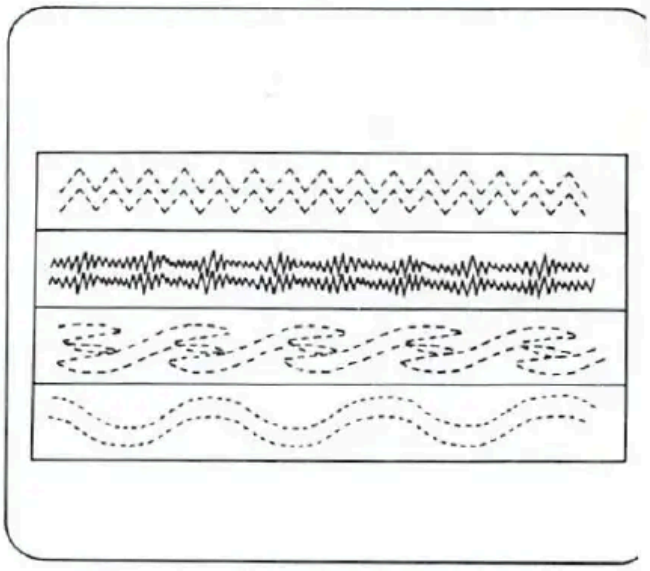

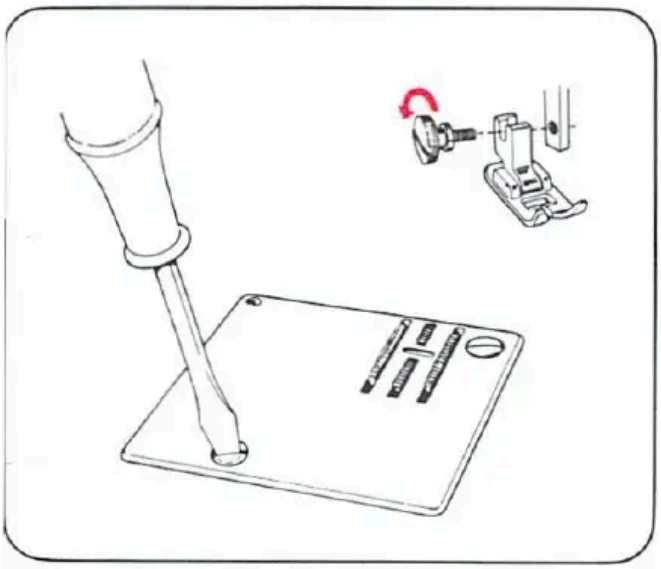

## 20.MAINTENANCE

Your machine requires regular cleaning and oiling for satisfactory sewing performance.
A machine which is used for a few hours a day needs to be cleaned and oiled once a month.

### Cleaning

Remove foot and needle.
Remove needle plate.

Brush off all dust and lint on feed dog with cleaning brush.

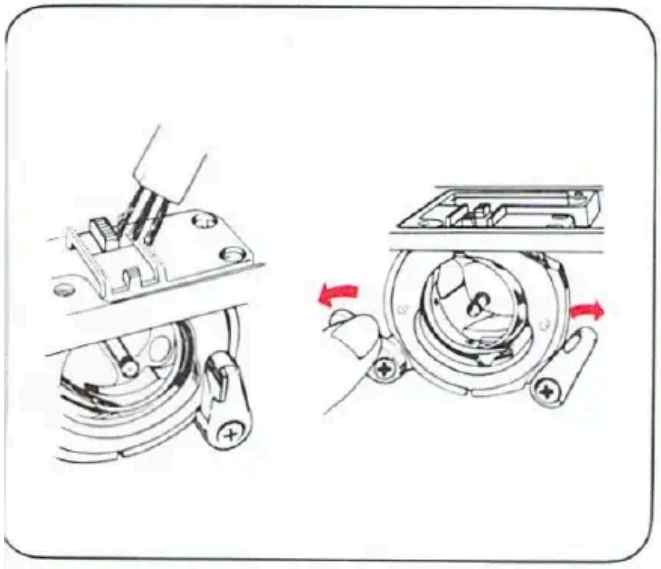

Turn latches outwards.

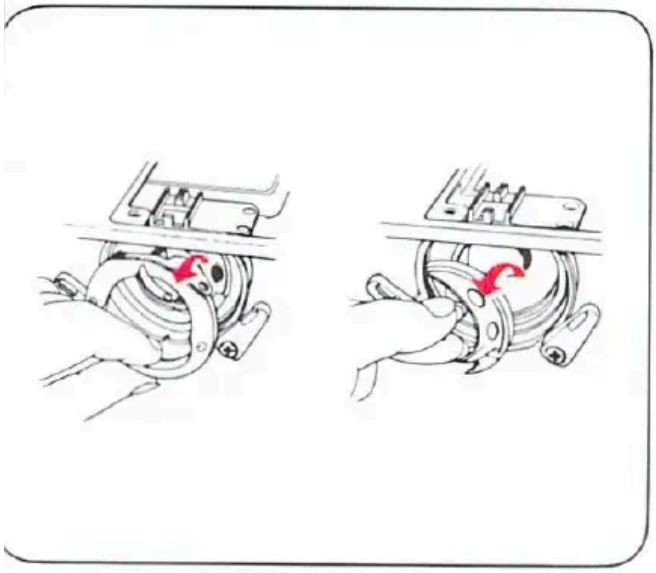

Remove hook race cover.
Remove hook. Clean hook race with a cleaning brush and a soft cloth.

## Oiling

Use oil manufactured specially for sewing machine use. Other oils will eventually cause mechanism to jam.

Apply one drop of oil to part of shuttle where friction occurs.

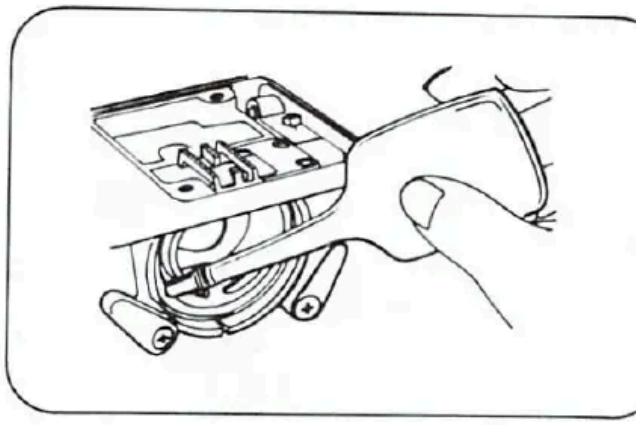

Open face cover and apply oil in the same way.

Be careful not to apply too much oil or it may stain your material and cause some sewing difficulty.

After oiling, run machine for 1-2 minutes to allow oil to penetrate to every part.

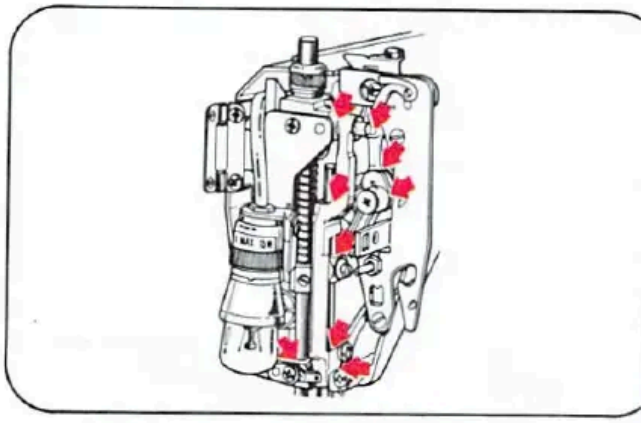

Remove top cover by loosening screws ⓐ and ⓑ with large screwdriver.

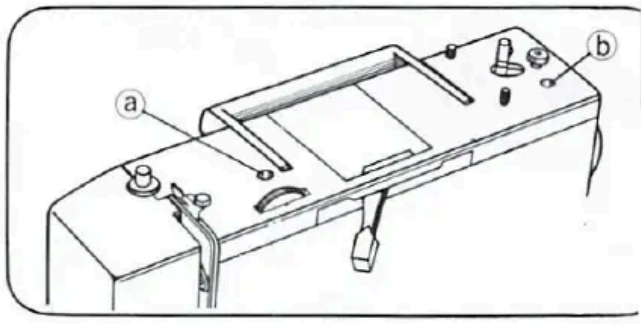


Apply one drop of oil to lubricating points indicated by arrows.

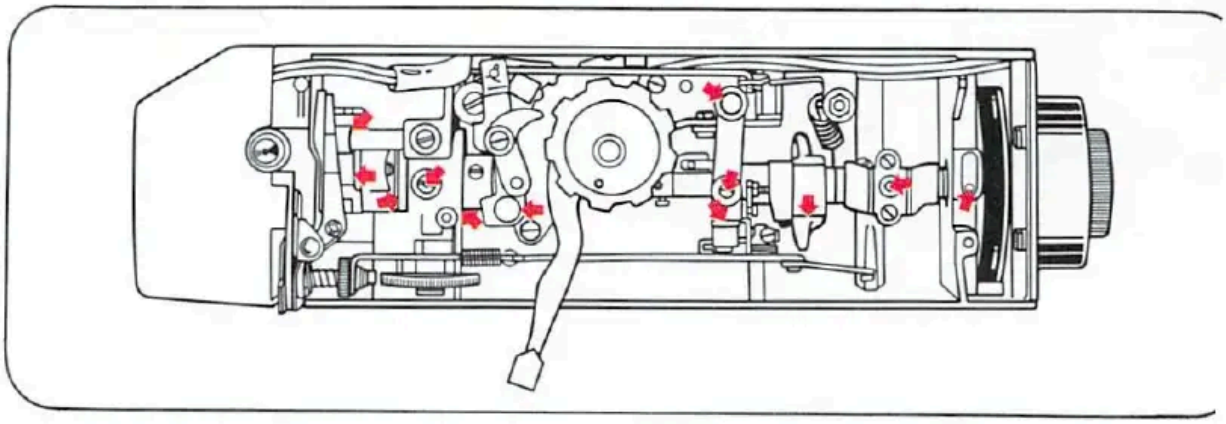

# 1.TROUBLE CHART

| PROBLEM | PROBABLE CAUSE | CORRECTION |
|---|---|---|
| Breaking lower thread | Thread not wound evenly on the bobbin or not drawn up correctly | P.10, P.14 |
| | Lower thread tension too tight | P.12 |
| | Lint stuck in the bobbin case and inside the tension spring | Remove lint and fluff with a cleaning brush |
| Skipping stitches | Needle not fully inserted | P. 7 |
| | Needle bent | P. 7 |
| | Size or type of needle and thread not suitable for the material | P.15 |
| | Incorrect upper threading | P.13 |
| | Too much oil on the shuttle | P.34 |
| rregular stitches | Incorrect size of needle for the material | P.15 |
| | Upper thread tension too loose | P.18 |
| | Incorrect lower tension | P.12 |
| The material not fed correctly | Pattern selection dial not set correctly | P.16 |
| | Incorrect feed dog height | P.12 |
| | Lint stuck on the feed dog | P.33 |

| PROBLEM | PROBABLE CAUSE | CORRECTION |
|---|---|---|
| The material puckers | Upper or lower thread tension too tight | P.12, P.21 |
| | Stitch too long for material | P.19 |
| | Thread too thick | P.16 |
| | Incorrect threading of upper or lower thread | P.13, P.11 |
| Breaking needle | Needle not correctly inserted | P. 7 |
| | Needle bent | P. 7 |
| | Needle clamp screw too loose | P. 7 |
| | Upper thread tension too tight | P.21 |
| | Needle too fine for the material | P.16 |
| | Dials have been changed while the needle was down in the material | P.19, P.22 |
| | Zigzag width set more than 2.5 while twin needle was attached | P. 14 |

If trouble is still apparent in the machine, please consult your nearest dealer. Do not try to correct fault by yourself.

For adjusting the tension of any belts, please do not try to adjust it by yours but contact your nearest dealer.

## Changing Light Bulb

Unplug the machine.
Open face cover as shown.

Remove bulb by unscrewing it in counterclockwise.
Install a new bulb by screwing it in clockwise.

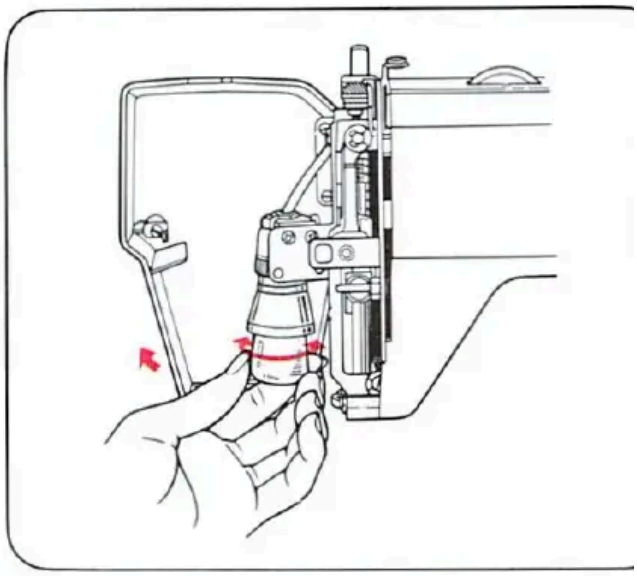

## 2. STITCH VARIETIES

**STANDARD**
NO. OF CAMS

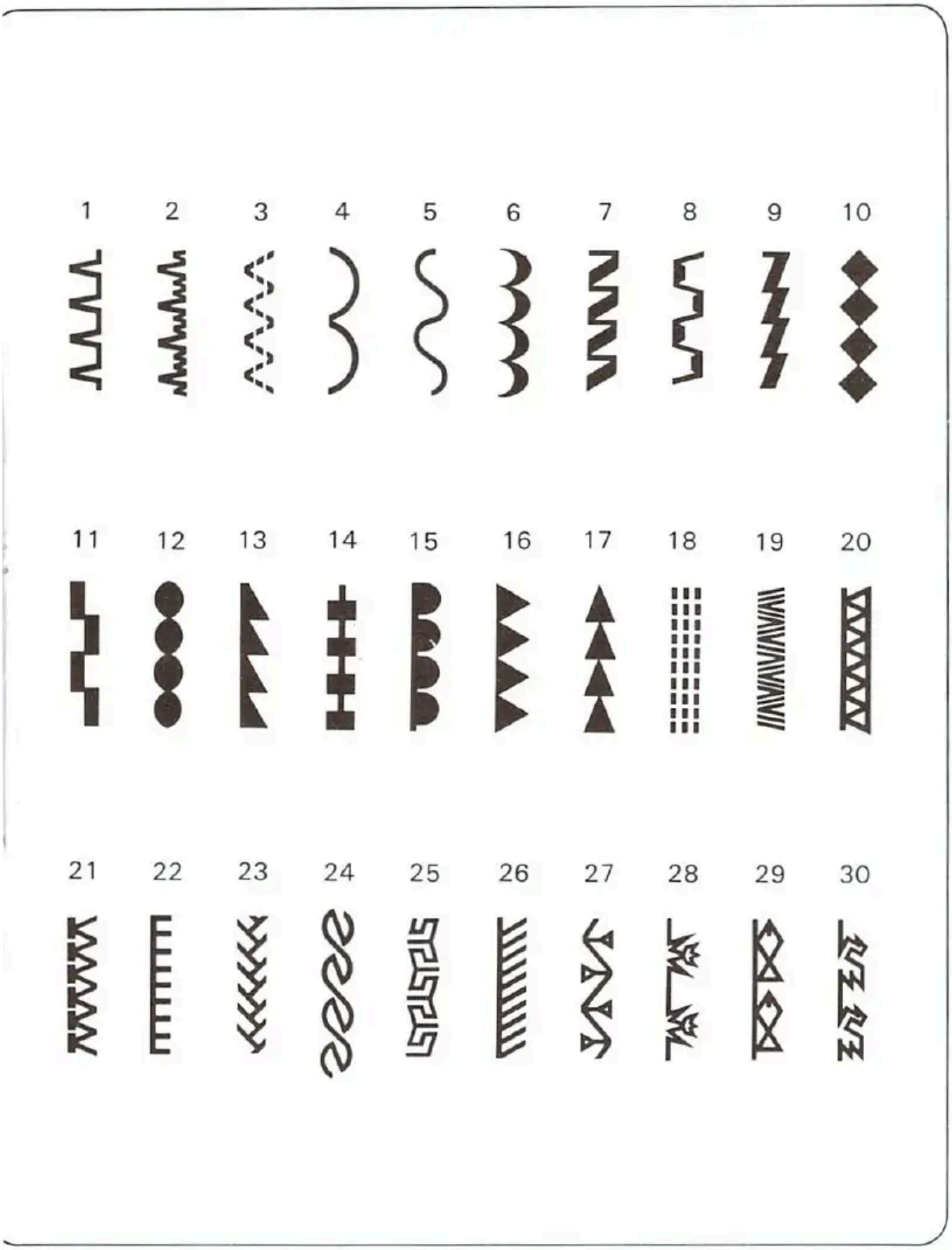

A STITCH AHEAD OF THE TIMES

# TOYOTA

sewing machines

"TOYOTA" FASHIONS YOUR FUTURE

**AISIN SEIKI CO., LTD.**

Kariya City 448, Japan

540009-111

Printed in Taiwan

TOYOTA at HOME

"TOYOTA" Sewing & Knitting Machines by AISIN, a Member of The TOYOTA Group

# YOUR NEW TOYOTA SEWING MACHINE CAN LAST A LIFETIME

TOYOTA sewing machines

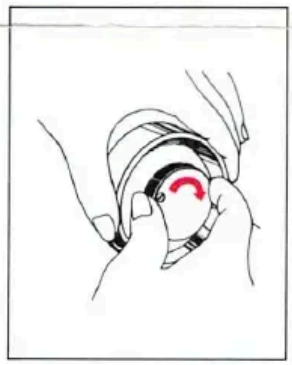

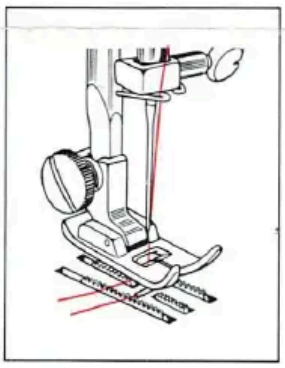

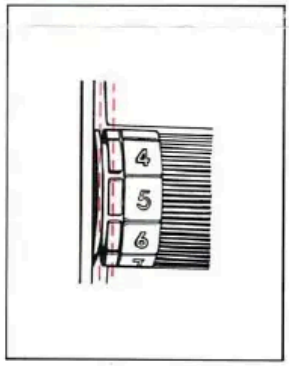


THIS LEAFLET EXPLAINS HOW

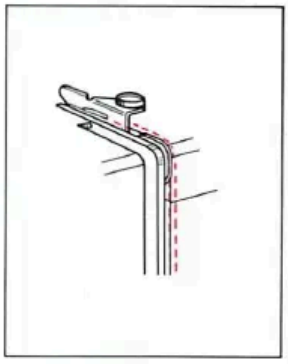

A STITCH AHEAD OF THE TIMES

TOYOTA sewing machines

# SAVE TIME, TROUBLE AND MONEY WITH THESE SIMPLE ADJUSTMENTS YOU CAN EASILY DO FOR YOURSELF

You will save a lot of money, making and mending with your new sewing machine, so with a little care you can ensure that you will not needlessly be without your machine.

Experience proves that nearly 95 per cent of what appear to be "service faults" are actually simple adjustments that the housewife can easily carry out herself. Moreover, once these simple adjustments are understood, it becomes much easier to use your machine and problems don't arise.

Almost without exception you can make your machine run smoothly again with no waste of sewing time and at no cost to you.

Yours faithfully,
SERVICE DEPARTMENT

| TROUBLE | PROBABLE CAUSE | REMEDY |
|---|---|---|
| **1** Machine binds, locks or noisy | A Thread or lint caught in race. Possible machine run without sewing fabrics<br>B Bobbin case inserted incorrectly<br>C Feed or darning indicator wrongly set<br>D Lack of oil | **A Many users think the machine has broken down when they first experience a "cotton jam". This is easily corrected. Turn to the section of your instruction manual which tells you how to remove and clean the shuttle and race. Follow directions carefully and, when you have removed the shuttle, thoroughly clean the race (into which shuttle fits), the race cover and the shuttle itself. Be careful not to score or damage the shuttle or race - these are precision-ground parts. Before re-assembling put one spot of oil on your fingertip and rub this around the outer edge of the shuttle. Do not over oil. Now refit shuttle and race cover as described in your instruction book**<br>**B Refit bobbin case as shown in instruction book and Fig. 1**<br>**C Set these as described in your book**<br>**D Oil as advised in instruction book** |
| **2** Upper thread breaking | A Machine wrongly threaded<br>B Tension too tight<br>C Needle wrongly fitted<br>D Bent or damaged needle<br>E Using wrong thread<br>F Thread wound around spool pin | **A Refer to threading instructions in your instruction book**<br>**B Set tension knob at lower number to loosen upper tension**<br>**C Your instruction book and Fig 2 will tell you how to fit needle properly**<br>**D Replace with new needle**<br>**E Refer to needle and thread chart in instruction book**<br>**F Release thread from spool pin** |

*Fig 1*

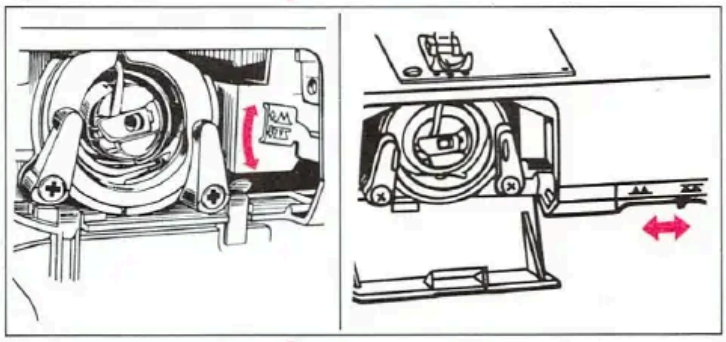

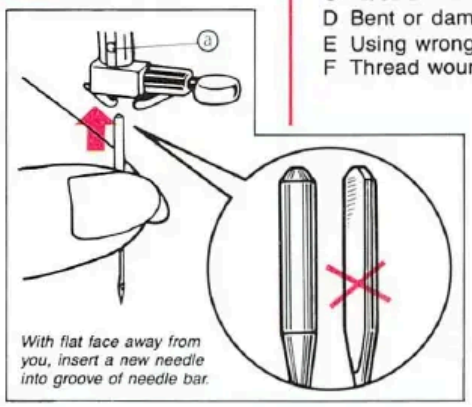


*With flat face away from you, insert a new needle into groove of needle bar.*

*Fig 2*

| TROUBLE | PROBABLE CAUSE | REMEDY |
|---|---|---|
| **3** Lower thread breaking | A Bobbin wound unevenly<br>B Too much thread on bobbin<br>C Bobbin case wrongly threaded<br>D Bobbin case tension too tight<br>E Bobbin bent | **A Remove thread and rewind evenly**<br>**B Remove excess thread**<br>**C Refer to threading diagram in instruction book and Figs 3, 4, 5**<br>**D Rarely needs adjusting - but refer to tension instructions**<br>**E Replace bobbin** |

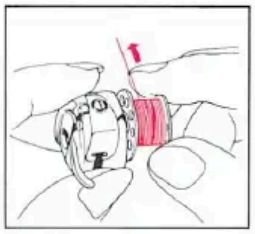

*Fig 3*

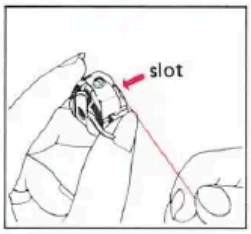


*Fig 4*

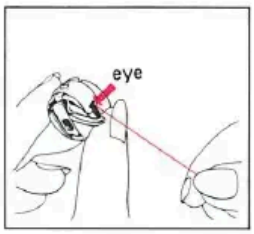


*Fig 5*

| | | |
|---|---|---|
| **4** Needle breaking | A Bent or damaged needle<br>B Material too thick for needle<br>C Pulling material<br>D Machine set to zig-zag when using straight stitch foot (Refers to swing needle machines only)<br>E Pattern came left in machine (Refers to swing needle machines only)<br>F Swing lever (zig-zag) moving while needle in work (bending needle) (Refers to swing needle machines only)<br>G Needle not pushed up to stop screw in needle bar | **A Fit new needle**<br>**B Refer to needle and thread chart**<br>**C Never pull material when sewing - just guide it**<br>**D Ensure swing lever (zig-zag) set for straight sewing**<br>**E Remove pattern cams from machine**<br>**F Ensure needle clear of work or pressure foot raised when using swing (zig-zag) lever**<br>**G Loosen needle clamp, push needle up to stop** |
| **5** Missing or irregular stitches | A Needle wrongly fitted<br>B Using wrong needle or thread<br>C Top tension slack<br>D Machine wrongly threaded<br>E Bobbin wound unevenly<br>F Feed dog too low<br>G Insufficient pressure on presser foot<br>H Pattern cams left in machine (refers to swing needle machines only) | **A See instruction book, fit correctly, also see Fig 2**<br>**B Refer to needle and thread chart**<br>**C Increase tension**<br>**D Thread correctly. See instruction book**<br>**E Rewind bobbin**<br>**F Raise feed. See instruction book**<br>**G Increase pressure. Seen instruction book**<br>**H Remove pattern cams from machine** |
| **6** Material puckers | A Tension too tight<br>B Stitch length too long<br>C Bent or blunt needle<br>D thread too thick | **A Loosen. See instruction book**<br>**B Reduce stitch length**<br>**C Fit new needle**<br>**D Refer to needle and thread chart** |

| TROUBLE | PROBABLE CAUSE | REMEDY |
|---|---|---|
| **7** Material will not feed through machine | A Feed set to "Darn"<br>B Fabric indicator set to "Darn"<br>C Darner released (upper position) | **A Set to "Normal" Fig 6**<br>**B Set to correct type of material**<br>**C Engage darner (lower position press down)** |

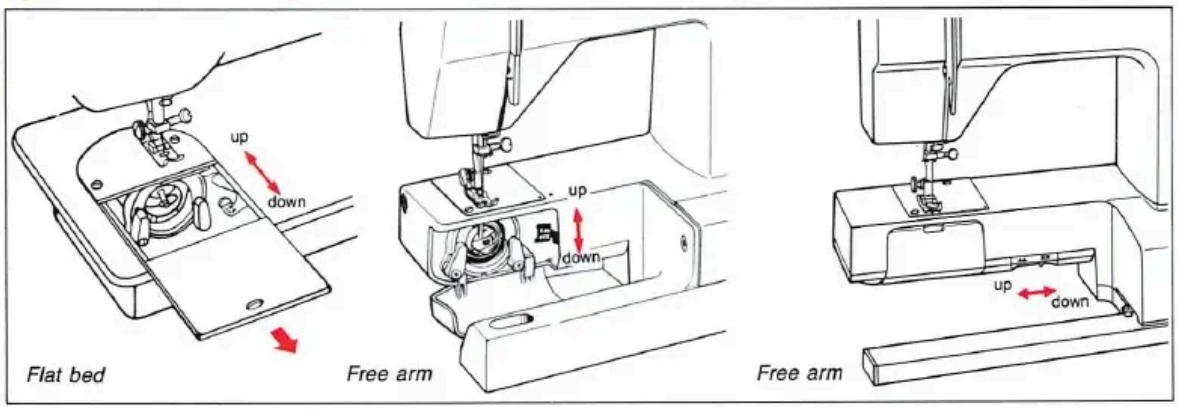


*Fig 6*

| | | |
|---|---|---|
| **8** Bobbin winder will not turn or winds unevenly | A Oil on Pulley rubber (slipping)<br>B Cotton wound around spindle | **A Remove oil with clean cloth**<br>**B Remove cotton from spindle** |
| **9** Electric motor fails to operate | A Fused plug<br>B Faulty connections<br>C Power switch off | A Check fuses<br>**B Have connections checked by a qualified electrician**<br>**C Switch on** |
| **10** Motor runs but does not drive machine | A Stop motion knob loose | **A Retighten stop motion knob. Fig. 7** |

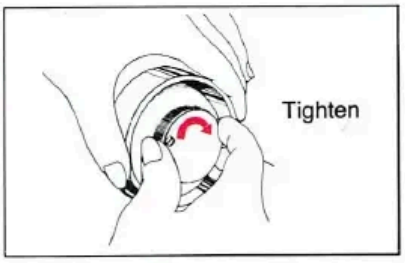


*Fig 7*

On electric machines follow the wiring instructions given on the label attached to the foot control.
If in doubt consult a qualified electrician.
All these points and many more are explained in your instruction manual. Follow the instructions carefully particularly if yours is a semi-automatic model, since their controls need to be properly set to produce the best possible sewing designs. A little patience and practice will amply reward the time spent.
We hope this leaflet has been helpful. We suggest to pin it to your instruction manual and keep them both with your sewing machine for easy reference.


**TOYOTA**
**sewing machines**

**AISIN (UK) LIMITED**

**Warehouse and Service Department:**
Unit 32, Rich Industrial Estrate, Crayford Road,
Crayford, Kent DA1 4JW
Telephone: Crayford 0322 522256/7


550009—129